Service Manual

CC3000 /N1B, /U1B, /K1B, /N2B, /U2B, /K2B
CC4000 /U1B, /K1B, /F1B, /U2B, /K2B, /F2B
CC4000F /U1B, /K1B, /U2B, /K2B
5Disc CD Changer

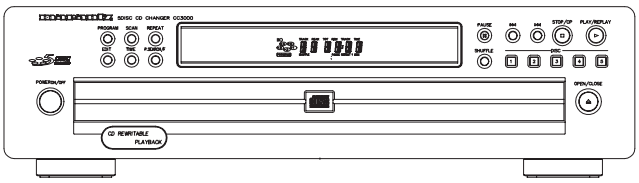

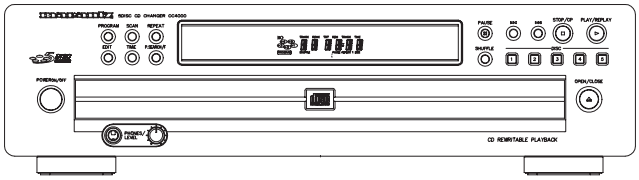

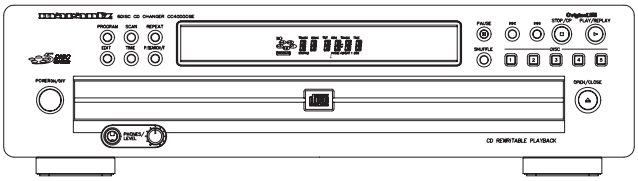

COMPACT disc DIGITAL AUDIO

TABLE OF CONTENTS

Variation Table 1-1
Location of pc boards & Technical Specifications 1-2
Service Aids, Chip Handling 1-3
ESD, Safety Instruction, etc. 1-4
Disassembly Instructions & Service positions 3-1
Service Test Programs 3-3
Set Block diagram 4
Set Wiring diagram 5
Supply & Headphone Boards 6
Front Board 7
Servo/Decoder Board 8
DAC/AF Board 9
Mechanical Exploded views & parts list 10

Please use this service manual with referring to the user guide (D.F.U) without fail.
修理の際は、必ず取扱説明書を準備し操作方法を確認の上作業を行って下さい。

marantz®

- CC3000 / CC4000 / CC4000OSE -

278W855010 ACT
3120 785 22010
First Issue:1999.08

MARANTZ DESIGN AND SERVICE

Using superior design and selected high grade components, **MARANTZ** company has created the ultimate in stereo sound. Only original **MARANTZ** parts can insure that your **MARANTZ** product will continue to perform to the specifications for which it is famous.

Parts for your **MARANTZ** equipment are generally available to our National Marantz Subsidiary or Agent.

ORDERING PARTS :

Parts can be ordered either by mail or by Fax.. In both cases, the correct part number has to be specified.

The following information must be supplied to eliminate delays in processing your order :

1. Complete address
2. Complete part numbers and quantities required
3. Description of parts
4. Model number for which part is required
5. Way of shipment
6. Signature : any order form or Fax. must be signed, otherwise such part order will be considered as null and void.

USA
MARANTZ AMERICA, INC.
440 MEDINAH ROAD
ROSELLE, ILLINOIS 60172
USA
PHONE : 630 - 307 - 3100
FAX : 630 - 307 - 2687

EUROPE / TRADING
MARANTZ EUROPE B.V.
P.O.BOX 80002, BUILDING SFF2
5600 JB EINDHOVEN
THE NETHERLANDS
PHONE : +31 - 40 - 2732241
FAX : +31 - 40 - 2735578

BRAZIL
MARANTZ BRAZIL
CAIXA POSTAL 21462
CEP 04698-970
SAO PAULO, SP, BRAZIL
PHONE : 0800 - 123123(Discagem Direta Gratuita)
FAX : +55 11 534. 8988

PROFESSIONAL **AMERICAS**
SUPERSCOPE TECHNOLOGIES, INC.
MARANTZ PROFESSIONAL PRODUCTS
2640 WHITE OAK CIRCLE, SUITE A
AURORA, ILLINOIS 60504 USA
PHONE : 630 - 820 - 4800
FAX : 630 - 820 - 8103

CANADA
LENBROOK INDUSTRIES LIMITED
633 GRANITE COURT,
PICKERING, ONTARIO L1W 3K1
CANADA
PHONE : 905 - 831 - 6333
FAX : 905 - 831 - 6936

AUSTRALIA
JAMO AUSTRALIA PTY LTD
1 EXPO COURT, P.O. BOX 350
MT. WAVERLEY VIC 3149
AUSTRALIA
PHONE : +61 - 3 - 9543 - 1522
FAX : +61 - 3 - 9543 - 3677

THAILAND
MRZ STANDARD CO.,LTD
746 - 754 MAHACHAI ROAD.,
WANGBURAPAPIROM, PHRANAKORN,
BANGKOK, 10200 THAILAND
PHONE : +66 - 2 - 222 9181
FAX : +66 - 2 - 224 6795

SINGAPORE
WO KEE HONG (S) PTE LTD
WO KEE HONG CENTRE
NO.23, LORONG 8, TOA PAYOH
SINGAPORE 319257
PHONE : +65 2544555
FAX : +65 2502213

TAIWAN
PAI- YUING CO., LTD.
6 TH FL NO, 148 SUNG KIANG ROAD,
TAIPEI, 10429, TAIWAN R.O.C.
PHONE : +886 - 2 - 25221304
FAX : +886 - 2 - 25630415

MALAYSIA
WO KEE HONG ELECTRONICS SDN. BHD.
NO. 102 JALAN SS 21/35, DAMANSARA
UTAMA, 47400 PETALING JAYA
SELANGOR DARUL EHSAN, MALAYSIA
PHONE : +60 3 - 7184666
FAX : +60 3 - 7173828

JAPAN *Technical*
MARANTZ JAPAN, INC.
35- 1, 7- CHOME, SAGAMIONO
SAGAMIHARA - SHI, KANAGAWA
JAPAN 228-8505
PHONE : +81 42 748 1013
FAX : +81 42 748 9190

日本マランツ株式会社
本　社　〒228-8505
神奈川県相模原市相模大野7-35-1
営業本部　〒150-0022
東京都渋谷区恵比寿南1-11-9

KOREA
MK ENTERPRISES LTD.
ROOM 604/605, ELECTRO-OFFICETEL, 16-58,
3GA, HANGANG-RO, YONGSAN-KU, SEOUL
KOREA
PHONE : +822 - 3232 - 155
FAX : +822 - 3232 - 154

SHOCK, FIRE HAZARD SERVICE TEST :

CAUTION : After servicing this appliance and prior to returning to customer, measure the resistance between either primary AC cord connector pins (with unit NOT connected to AC mains and its Power switch ON), and the face or Front Panel of product and controls and chassis bottom.

Any resistance measurement less than 1 Megohms should cause unit to be repaired or corrected before AC power is applied, and verified before it is return to the user/customer.

Ref. UL Standard No. 1492.

In case of difficulties, do not hesitate to contact the Technical Department at above mentioned address.

990805ACT

VARIATION TABLE

Type: / Features:	CC3000	CC4000	CC4000F (CC4000OSE)
Headphone	-	X	X
CC-DAC(Non-bitstream) TDA1545AT/N2	X	-	-
BCC-DAC(Bitstream) TDA1549T/N1	-	X	X
OP-AMP for LPF	NJM4560D	NJM2114D	NJM2114D
Mains Transformer Type	EI-48 (Except /K)	EI-54	EI-54
Special ELE.CAP. for DAC/AF BOARD	-	-	*1
Special ELE.CAP. for SUPPLY BOARD	-	-	*2
Additional Bottom Plate	-	-	X
Remote Control (RC4000CC)	X	X	X
RC5 In/Out	X	X	X
Digital Out (COAX)	X	X	X
CD Text	-	-	-
CDRW(Play Rewritable Disc)	X	X	X

***1**

(1) Item2895/2896 Elcap R20 50V S 10uF PM20 A (2020 012 93203)
(2) Item2897 Elcap ROA 50V S 47uF PM20 A (2020 012 93432)
(3) Item2899 Elcap ARS 25V S 47uF PM20 A (4822 124 12023)
(4) Item2902 Elcap ARS 25V S 47uF PM20 A (4822 124 12023)
(5) Item2905/2906 Elcap S 47uF 6V3 BIP (ELNA) A (4822 124 80954)

***2**

Item2510 Elcap R20 16V S 2200uF PM20 (4822 124 40723)

LOCATION OF PC BOARDS

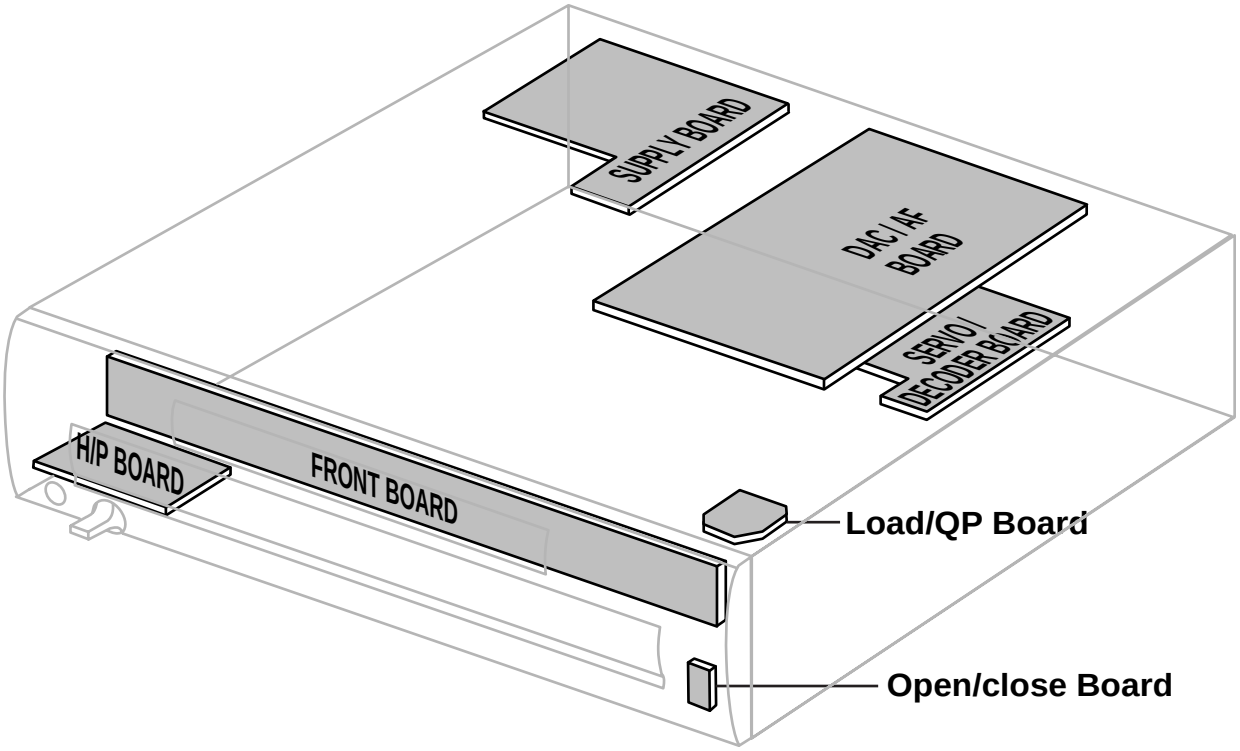

SPECIFICATIONS

GENERAL:

Mains voltage : 100V for /F
110-127V/220-240V Switchable for /K
120V for /U
220-230V for /N

Mains frequency : 50/60Hz
Power consumption : < 12W at Play mode
Dimension (WxDxH) : 435 x 380 x 119mm

AUDIO PERFORMANCE:

Output level : 2Vrms ± 2dB @ 47kohm
Frequency response within ± 0.4dB : 20Hz - 20kHz
Dynamic range at 1kHz : > 90dB [1)]
Signal/Noise ratio at 1kHz : > 98dB [1)]
Total Harmonic Distortion at 1kHz : < 0.004%
Channel unbalance at 1kHz : < 1dB
Channel separation at 1kHz : > 95dB [1)]
Headphone impedance : 30 - 600 ohm
Headphone output (e.m.f.) : 4.5Vrms ± 2dB
Digital Output at 75ohm : 0.5V

[1)] with 13th order Filter eg. 4822 395 30204

SERVICE AIDS

Service Tools:

Universal Torx driver holder 4822 395 91019
Torx bit T10 150mm 4822 395 50456
Torx driver set T6 - T20 ..... 4822 395 50145
Torx driver T10 extended 4822 395 50423

Compact Disc:

SBC426/426A Test disc 5 + 5A 4822 397 30096
SBC442 Audio Burn-in Test disc 1kHz 4822 397 30155
SBC429 Audio Signals disc 4822 397 30184
Dolby Pro-logic Test Disc 4822 395 10216
Eccentricity Disc, 150µm 4822 397 30279

Others:

13th Order Filter 4822 395 30204

ESD Equipment:

Anti-static table mat - large 1200x650x1.25mm ... 4822 466 10953
Anti-static table mat - small 600x650x1.25mm 4822 466 10958
Anti-static wristband 4822 395 10223
Connector box (1MΩ) 4822 320 11307
Extension cable
(to connect wristband to conn. box) 4822 320 11305
Connecting cable
(to connect table mat to conn. box) 4822 320 11306
Earth cable (to connect product to mat or box) 4822 320 11308
Complete kit ESD3
(combining all above products) 4822 320 10671
Wristband tester 4822 344 13999

HANDLING CHIP COMPONENTS

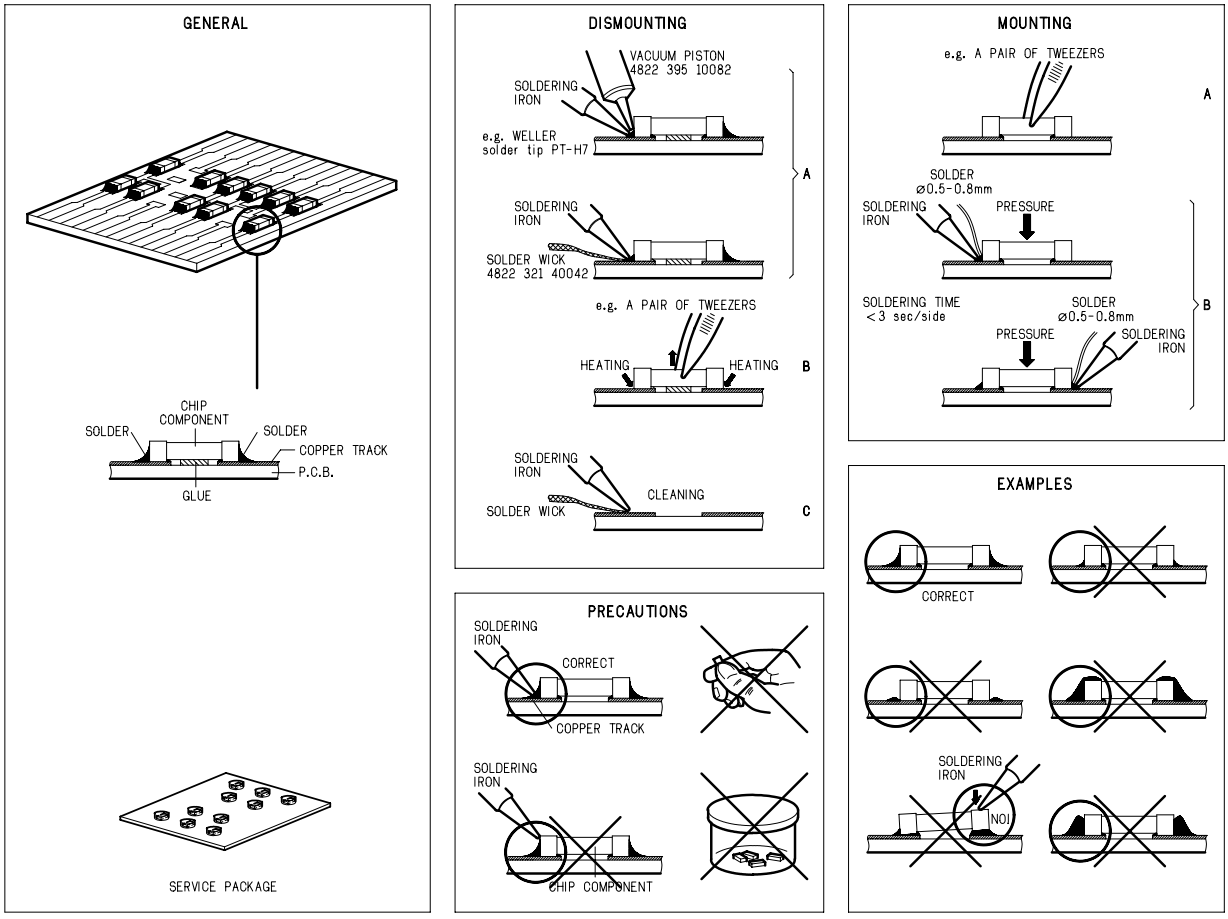

ESD

GB WARNING

All ICs and many other semi-conductors are susceptible to electrostatic discharges (ESD). Careless handling during repair can reduce life drastically.
When repairing, make sure that you are connected with the same potential as the mass of the set via a wrist wrap with resistance.
Keep components and tools also at this potential.

NL WAARSCHUWING

Alle IC's en vele andere halfgeleiders zijn gevoelig voor electrostatische ontladingen (ESD).
Onzorgvuldig behandelen tijdens reparatie kan de levensduur drastisch doen verminderen.
Zorg ervoor dat u tijdens reparatie via een polsband met weerstand verbonden bent met hetzelfde potentiaal als de massa van het apparaat.
Houd componenten en hulpmiddelen ook op ditzelfde potentiaal.

F ATTENTION

Tous les IC et beaucoup d'autres semi-conducteurs sont sensibles aux décharges statiques (ESD).
Leur longévité pourrait être considérablement écourtée par le fait qu'aucune précaution n'est prise à leur manipulation.
Lors de réparations, s'assurer de bien être relié au même potentiel que la masse de l'appareil et enfiler le bracelet serti d'une résistance de sécurité.
Veiller à ce que les composants ainsi que les outils que l'on utilise soient également à ce potentiel.

D WARNUNG

Alle ICs und viele andere Halbleiter sind empfindlich gegenüber elektrostatischen Entladungen (ESD).
Unsorgfältige Behandlung im Reparaturfall kan die Lebensdauer drastisch reduzieren.
Veranlassen Sie, dass Sie im Reparaturfall über ein Pulsarmband mit Widerstand verbunden sind mit dem gleichen Potential wie die Masse des Gerätes.
Bauteile und Hilfsmittel auch auf dieses gleiche Potential halten.

I AVVERTIMENTO

Tutti IC e parecchi semi-conduttori sono sensibili alle scariche statiche (ESD).
La loro longevità potrebbe essere fortemente ridatta in caso di non osservazione della più grande cauzione alla loro manipolazione.
Durante le riparazioni occorre quindi essere collegato allo stesso potenziale che quello della massa dell'apparecchio tramite un braccialetto a resistenza.
Assicurarsi che i componenti e anche gli utensili con quali si lavora siano anche a questo potenziale.

GB

Safety regulations require that the set be restored to its original condition and that parts which are identical with those specified, be used.

NL

Veiligheidsbepalingen vereisen, dat het apparaat bij reparatie in zijn oorspronkelijke toestand wordt teruggebracht en dat onderdelen, identiek aan de gespecificeerde, worden toegepast.

F

Les normes de sécurité exigent que l'appareil soit remis à l'état d'origine et que soient utiliséés les piéces de rechange identiques à celles spécifiées.

D

Bei jeder Reparatur sind die geltenden Sicherheitsvorschriften zu beachten. Der Original zustand des Geräts darf nicht verändert werden; für Reparaturen sind Original-Ersatzteile zu verwenden.

I

Le norme di sicurezza esigono che l'apparecchio venga rimesso nelle condizioni originali e che siano utilizzati i pezzi di ricambio identici a quelli specificati.

"After servicing and before returning set to customer perform a leakage current measurement test from all exposed metal parts to earth ground to assure no shock hazard exist. The leakage current must not exceed 0.5mA."

"Pour votre sécurité, ces documents doivent être utilisés par des spécialistes agréés, seuls habilités à réparer votre appareil en panne".

GB Warning !

Invisible laser radiation when open.
Avoid direct exposure to beam.

S Varning !

Osynlig laserstrålning när apparaten är öppnad och spärren är urkopplad. Betrakta ej strålen.

SF Varoitus !

Avatussa laitteessa ja suojalukituksen ohitettaessa olet alttiina näkymättömälle laserisäteilylle. Älä katso säteeseen!

DK Advarse !

Usynlig laserstråling ved åbning når sikkerhedsafbrydere er ude af funktion. Undgå udsaettelse for stråling.

3-1

DISMANTLING INSTRUCTIONS

Dismantling of the DAC/AF board, Supply board and Front Panel Assembly

1) Remove the Top Cover (pos 151) by 8 screws.
   - 2 screws on each side
   - 4 screws from the rear
2) Remove the DAC/AF board by 5 screws A. Be careful not to damage flex cable.

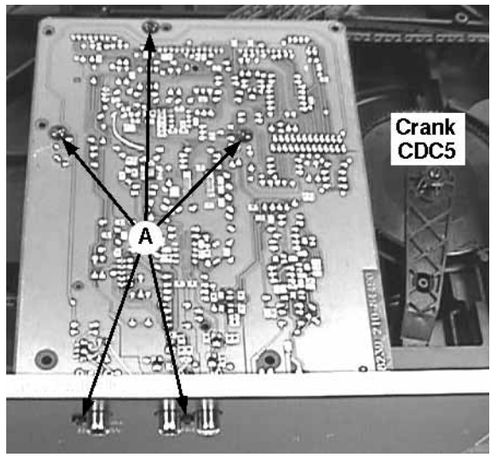

3) Remove the Supply board by 3 screws B and disconnect the Lever Power button (pos 6) as indicated.

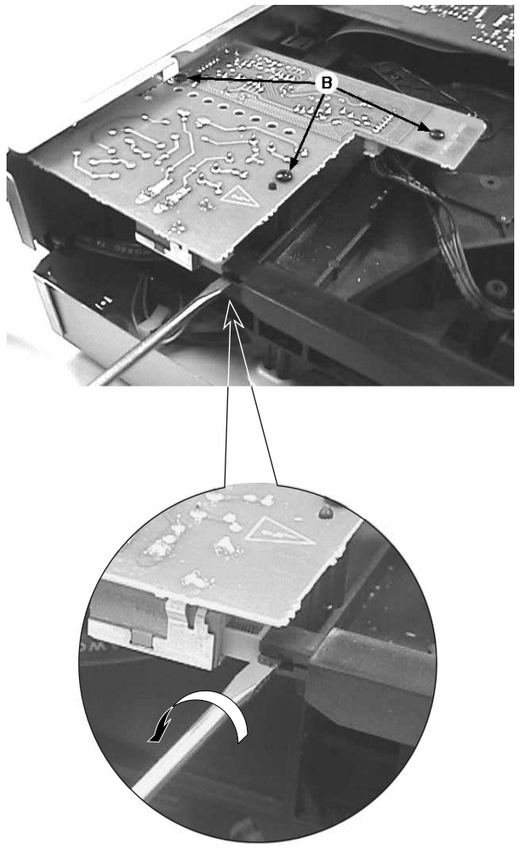

4) Turn the crank CDC5 (pos 96) clockwise to slide out the tray assembly.

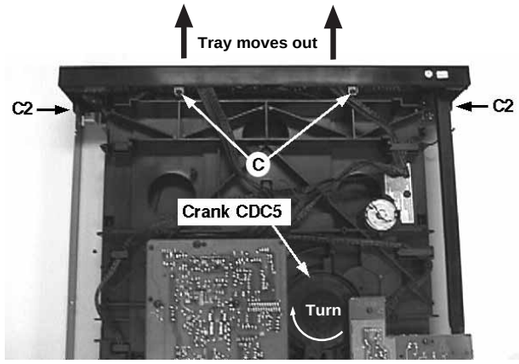

5) With the set upside-down, release the 2 catches C1 and remove the tray cover as indicated.
6) Loosen the Front Panel assembly from the bottom bracket (pos 181) by 5 screws C and 4 catches C2 as indicated.
   - 2 screws on top
   - 3 screws from the bottom side

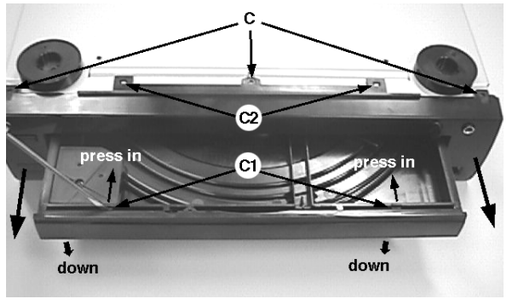

Dismantling of the Tray Assembly and Servo board

1) Remove the Metal rod (pos 152) as indicated.
2) Loosen the Crank CDC5 (pos 96) with screw D and lift the crank arm out of the groove on the tray assembly. The complete tray assembly can be pulled out of the Frame (pos93).

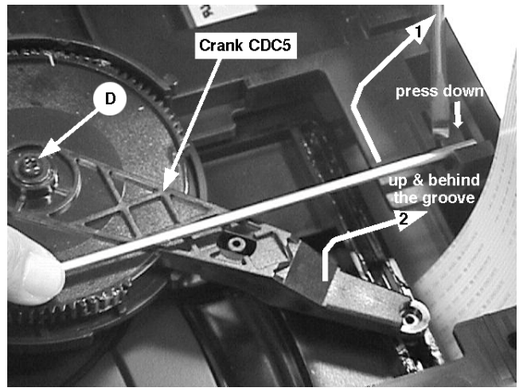

3) Remove the Servo board by 2 screws E.
4) Protect the CD mechanism's Laser against ESD by short-circuiting the flexfoil with a paper clip immediately upon disconnection from the flexfoil connector.
   (See Warning for more details)

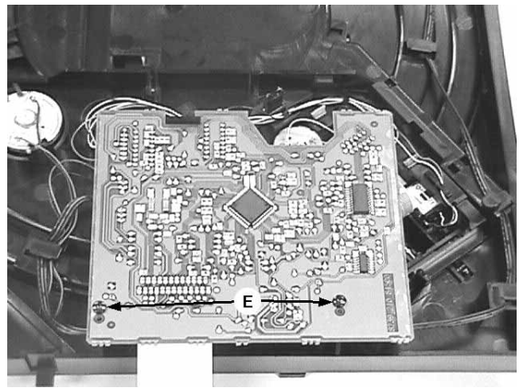

Dismantling of the CD Mechanism

1) Loosen the Pressure ring holder (pos 90) by relasing catch C3 as indicated.
2) Remove the Pressure plate (pos 89) and Rotary disc assembly (pos 100) by 1 screw F.

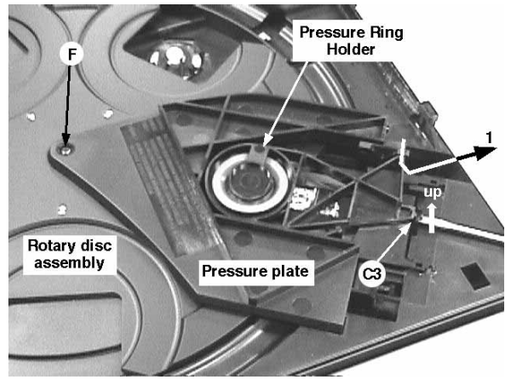

3) Turn the Tray assembly upside-down and remove the CDM Lock (pos 99) by using a "minus" screw-driver to release 2 catches C4 as indicated.

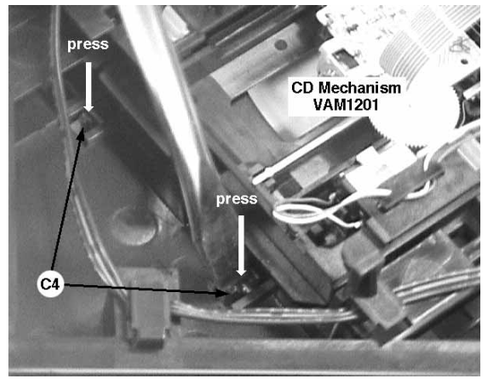

4) With the Tray assembly facing up again, turn the cam wheel (pos 116) to bring the CD mechanism (pos 98) to the down position. Remove the CD mechanism by sliding out the 4 rubber suspension (pos 104 to 107).

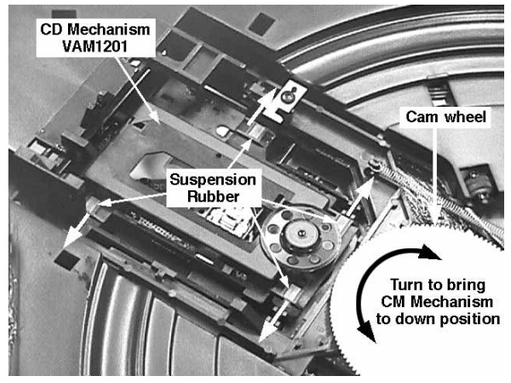

Assembly of the CD mechanism and Rotary disc CDC5

1) Remove the 4 rubber suspension (pos 104-107) from the Support bracket (pos 114) and attached them on to the CD mechanism.
2) Place the CD mechanism with the rubber suspension above the mounting 4 holes.
3) Hold the CD mechanism in position and pull the tips of the rubber suspension through the holes in the Support bracket.

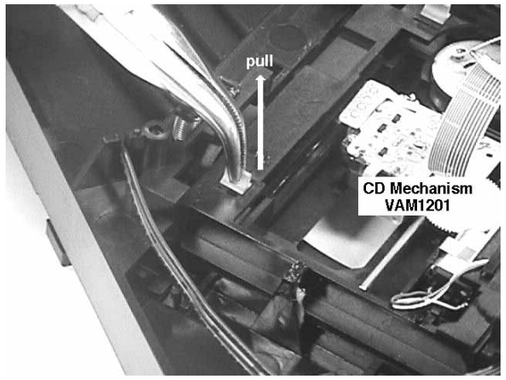

4) After assembly of the CD Mechanism, the Cam wheel (pos 116) and the Rotary disc (pos 100) must be re-aligned. This is done by positioning the Bearing (pos 101), pin on the Cam wheel and CD Mechanism in a straight line as indicated.
5) Assemble the Rotary disc onto the Bearing with the "1" printing mark facing the CD Mechanism.

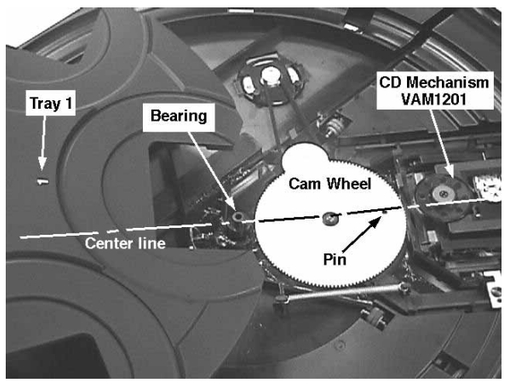

Warning

Charged capacitors on the Servo board may damage the CD drive electronics when connecting a new CD mechanism. That's why, besides the safety measures like

- ***Switch off power supply***
- ***ESD protection***

Additional actions must be taken by the repair technician.

The following steps have to be done when replacing the CD Mechanism:

1) Disconnect the old CD mechanism flexfoil from printed board.
2) Connect paperclip to CD mechanism flexfoil to short-circuit flexfoil (fig.1).
3) Short-circuit printed board with **brass-sheet (4822 321 11197)** plugged into the flexfoil connector (fig. 2).
4) Remove the old CD mechanism.
5) Assemble the new CD mechanism into position.
5) Remove short-circuit from printed board connector.
6) Remove short-circuit from flexfoil of new CD mechanism.
7) Connect new flexfoil to print connector (fig. 3).

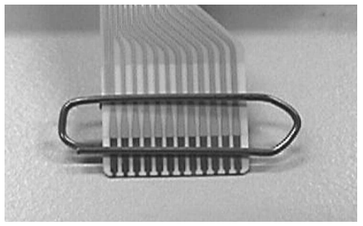

Figure 1

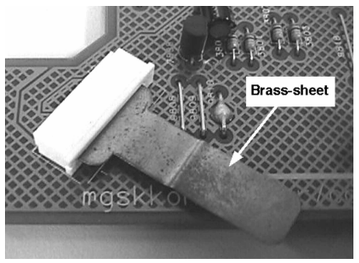

Figure 2

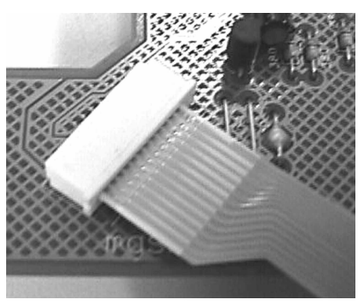

Figure 3

SERVICE POSITION 1

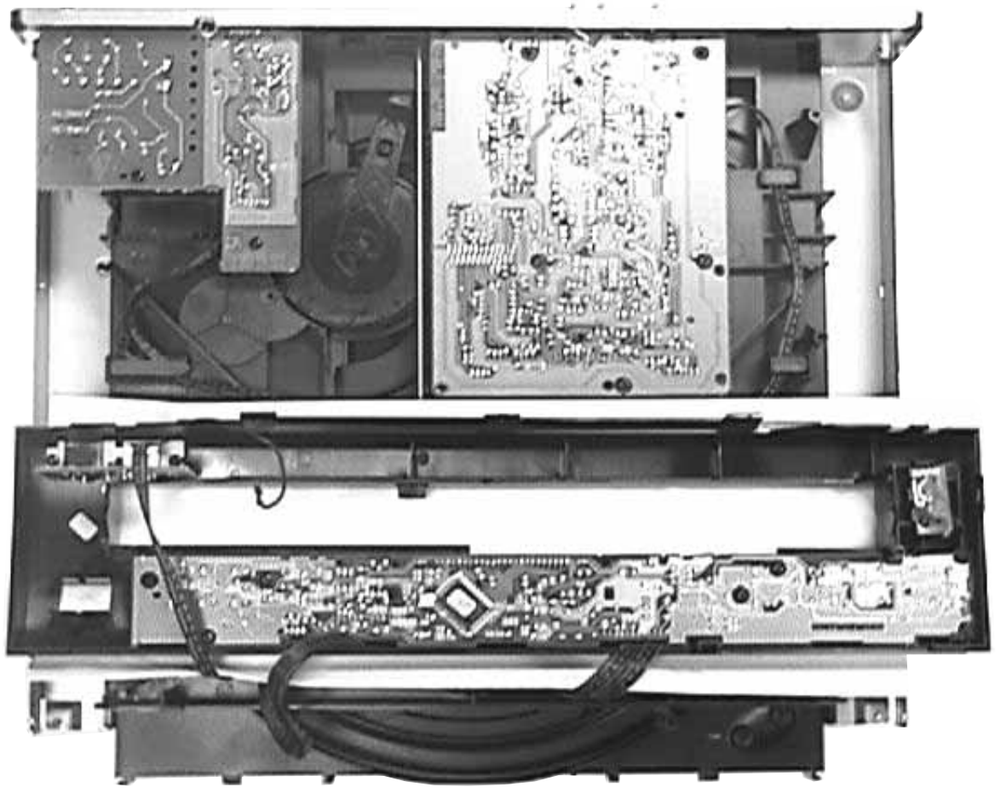

SERVICE POSITION 2

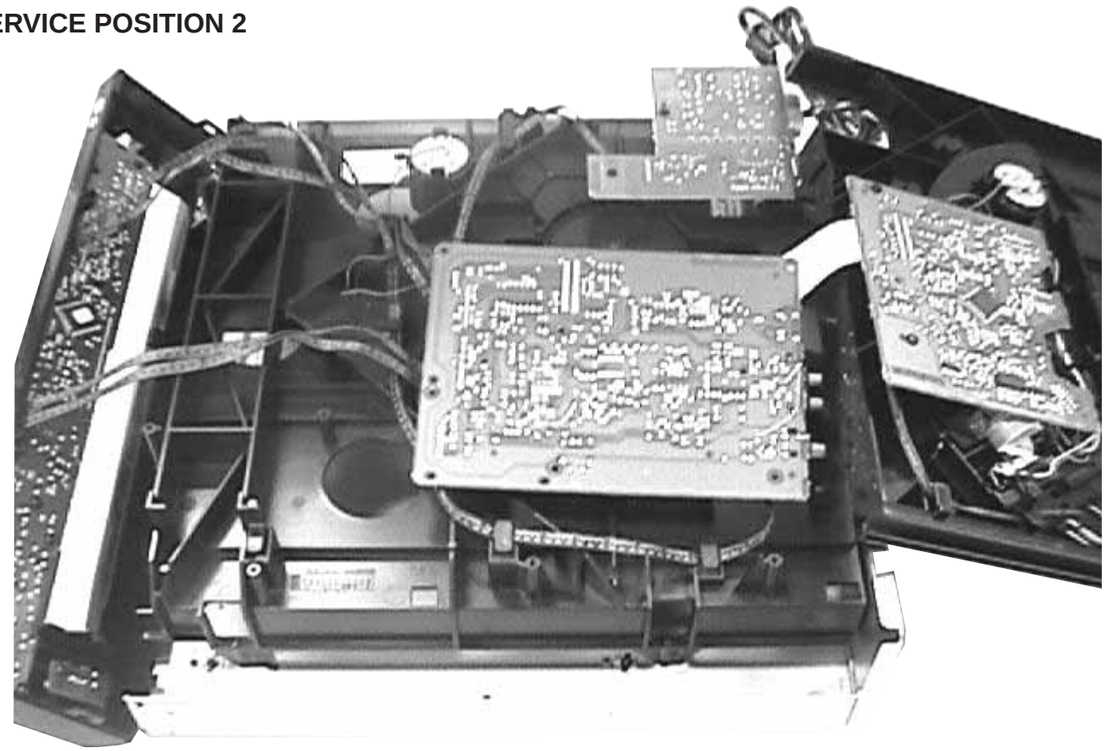

3-3

SERVICE TEST PROGRAM I

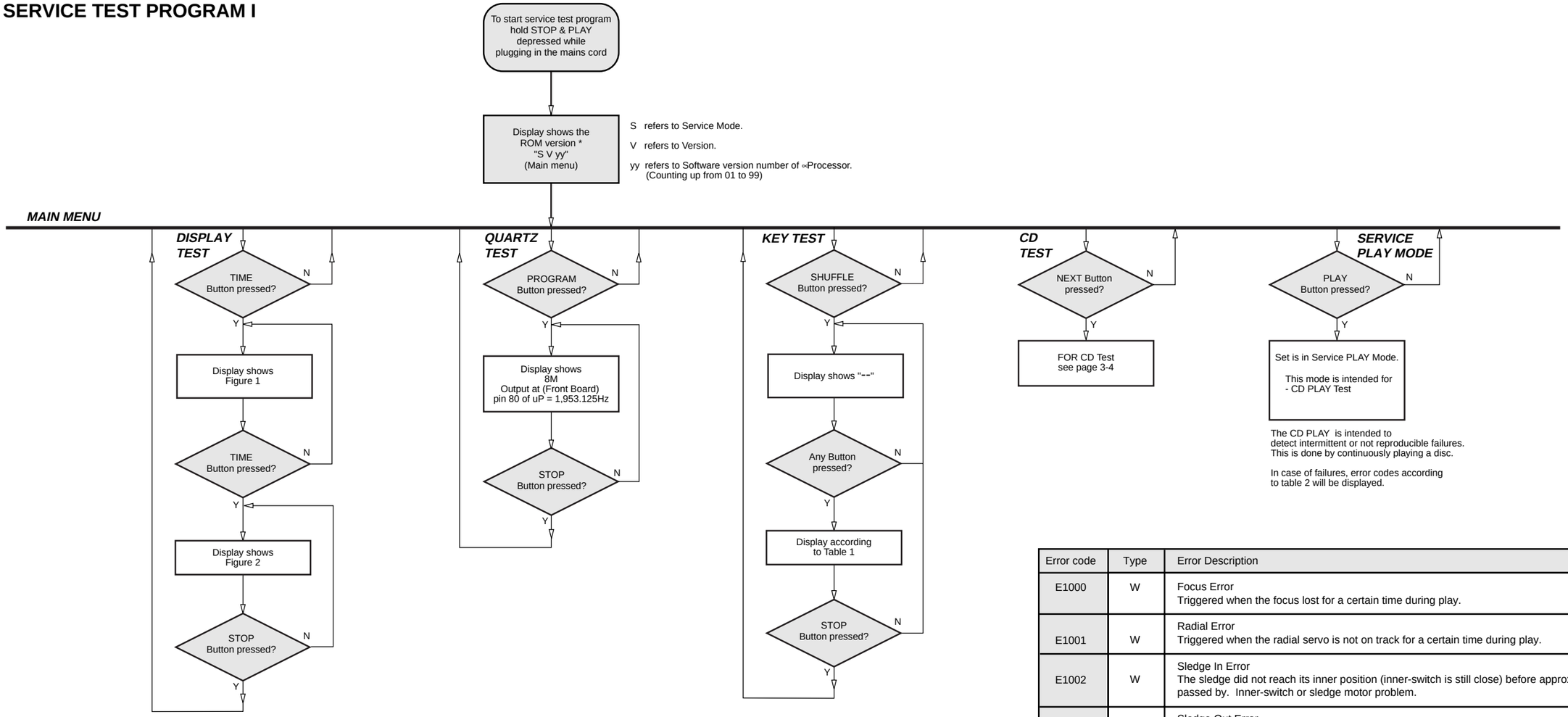

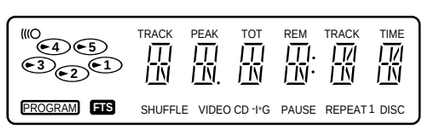

Figure 1

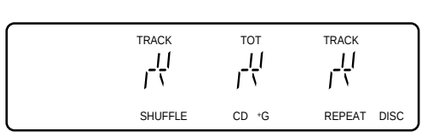

Figure 2

Keys activated	Display shows	Keys activated	Display shows	Keys activated	Display shows
No Key pressed	--	Pause	7	Disc 3	15
Any Remote control key	RC	Previous	8	Disc 4	16
Program	1	Next	9	Disc 5	17
Scan	2	Stop	Exit	Open/Close	18
Repeat	3	Play	11	Quick Play	19
Edit	4	Shuffle	12	Load	20
Time	5	Disc 1	13		
Fader	6	Disc 2	14		

Table 1

Error code	Type	Error Description
E1000	W	Focus Error Triggered when the focus lost for a certain time during play.
E1001	W	Radial Error Triggered when the radial servo is not on track for a certain time during play.
E1002	W	Sledge In Error The sledge did not reach its inner position (inner-switch is still close) before approximately 6 Sec. have passed by. Inner-switch or sledge motor problem.
E1003	W	Sledge Out Error The sledge did not come out of its inner position (inner-switch is still open) before approximately 250 mSec. have passed by. Inner-switch or sledge motor problem.
E1005	W	Jump error Triggered in normal play when the jump destination could not be found within a certain time.
E1006	W	Subcode Error Triggered when a no valid subcode for a certain time during play.
E1007	W	PLL Error The Phase Lock Loop could not lock within a certain time.
E1008	W	Turntable Motor Error Generated when the CD could not reached 75% of speed during startup within a certain time. Discmotor problem.
E1020	F	Focus Search Error The focus point has not been found within a certain time.
E1070	W	The carousel switch is not open within certain time. This can happen when either the switch is defective and closed all the time, or when the carousel is blocked in between two disc positions. The time-out is approximately 5 seconds.
E1071	W	The carousel position switch did not close within a certain time. This can happen when the switch is defective and never closes electrically, or when the carousel is blocked in between two disc positions. The time-out is approximately 5 Sec.
E1079	W	The drawer could not enter the inside position and is opening again. This can be caused because the drawer is blocked by something and cannot go fully inside, or the drawer switch is defective and does not close.

F = Fatal error & the set stop play function W = Warning

Table 2

3-4

SERVICE TEST PROGRAM II

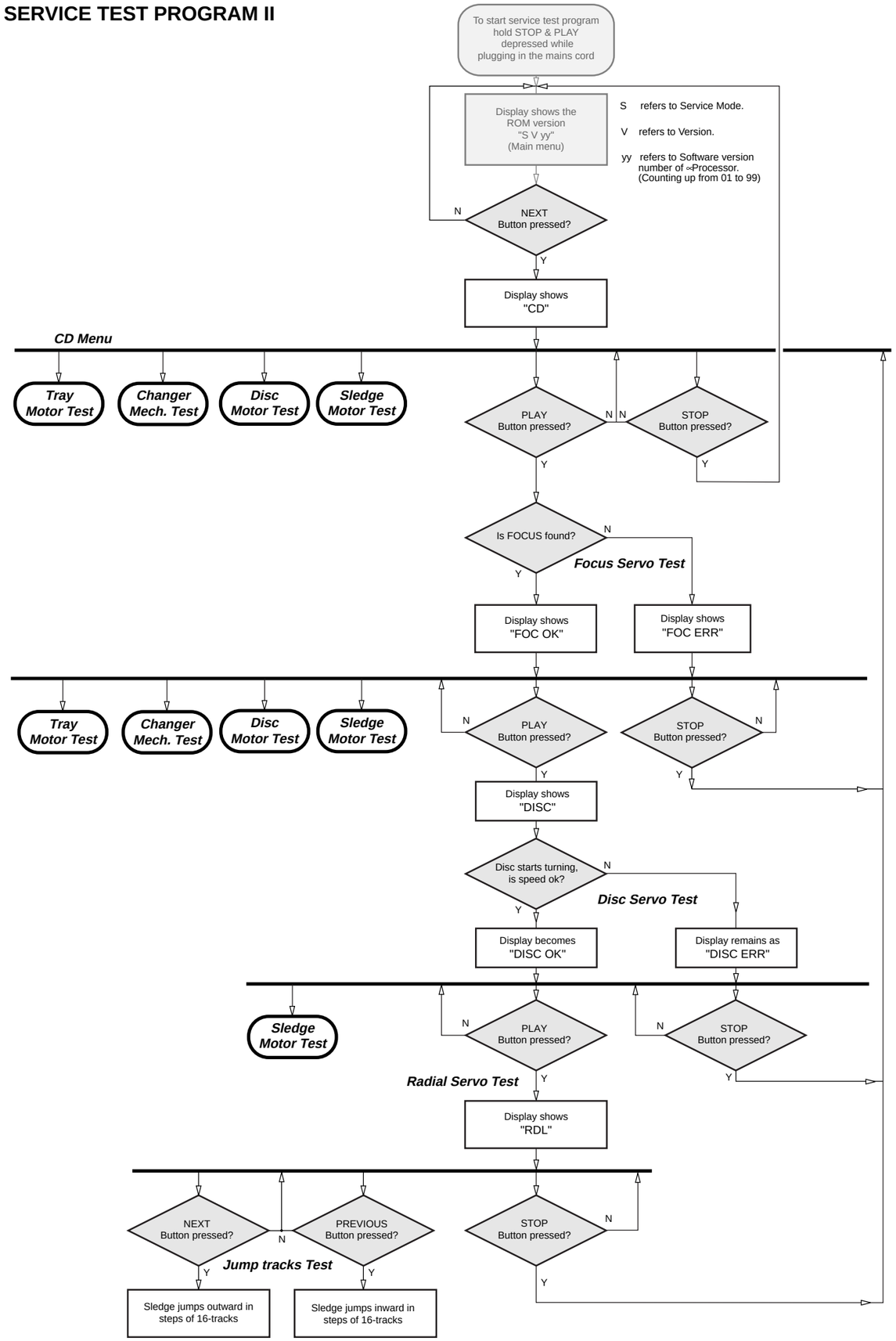

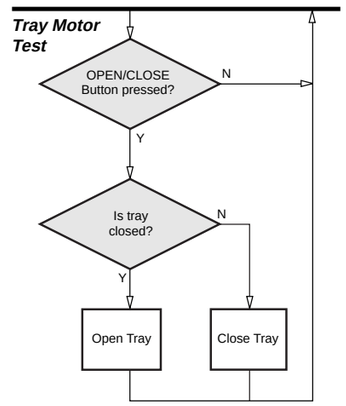

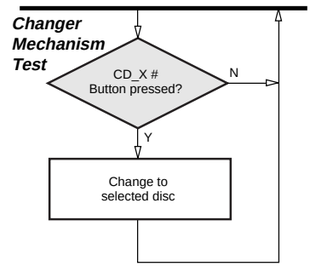

CD_X refers to CD1, CD2 or CD3

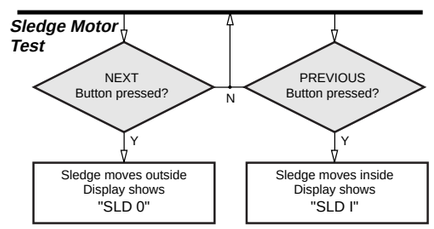

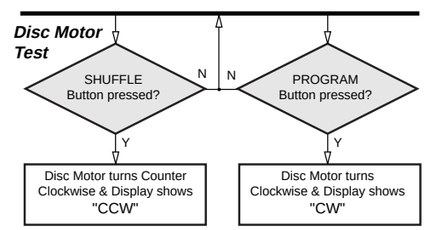

Note: In software version 15 and below there are some slight problems in the Service Program for the CD Test which will be resolved by running change. The problems are:

1) If the Tray Motor test is done with the Tray in the open position, the tray will close only after the pressing the Open/Close button twice.

2) If this test is performed after the Tray Motor Test, the tray may not change as selected. The test will resumed correctly if CD test is quit and restarted.

3) After performing the Sledge Motor Test or Disc Motor Test the set will return automatically to the "CD Menu".

4-1

SET BLOCK DIAGRAM

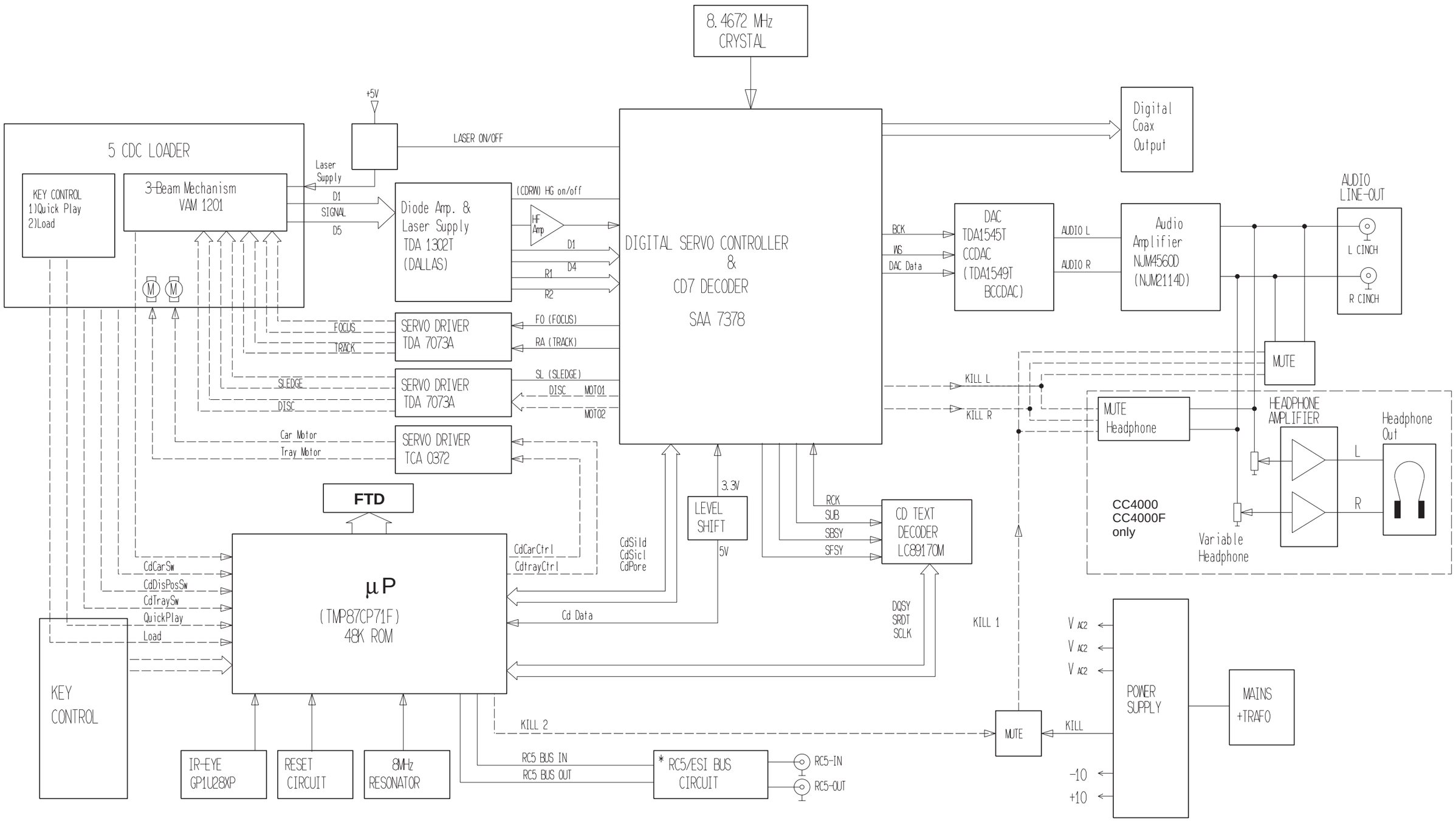

5-1

SET WIRING DIAGRAM

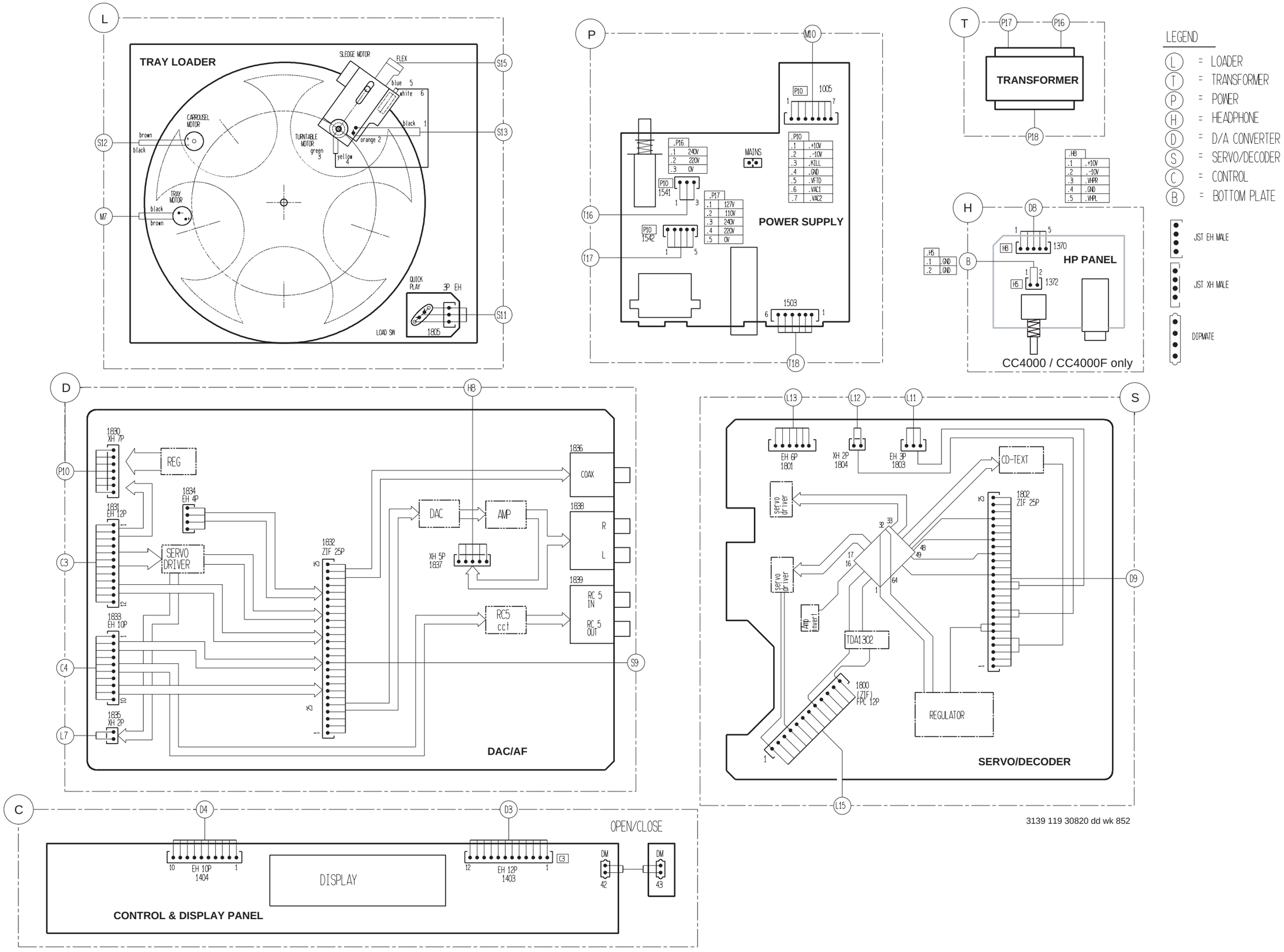

3139 119 30820 dd wk 852

SUPPLY & HEADPHONE BOARD

TABLE OF CONTENTS

Headphone part - Circuit 6-1
Supply part - Circuit 6-2
Supply & Heaphone layout 6-2
Electrical parts list 6-3

HEADPHONE CIRCUIT DIAGRAM

CC4000/CC4000F ONLY

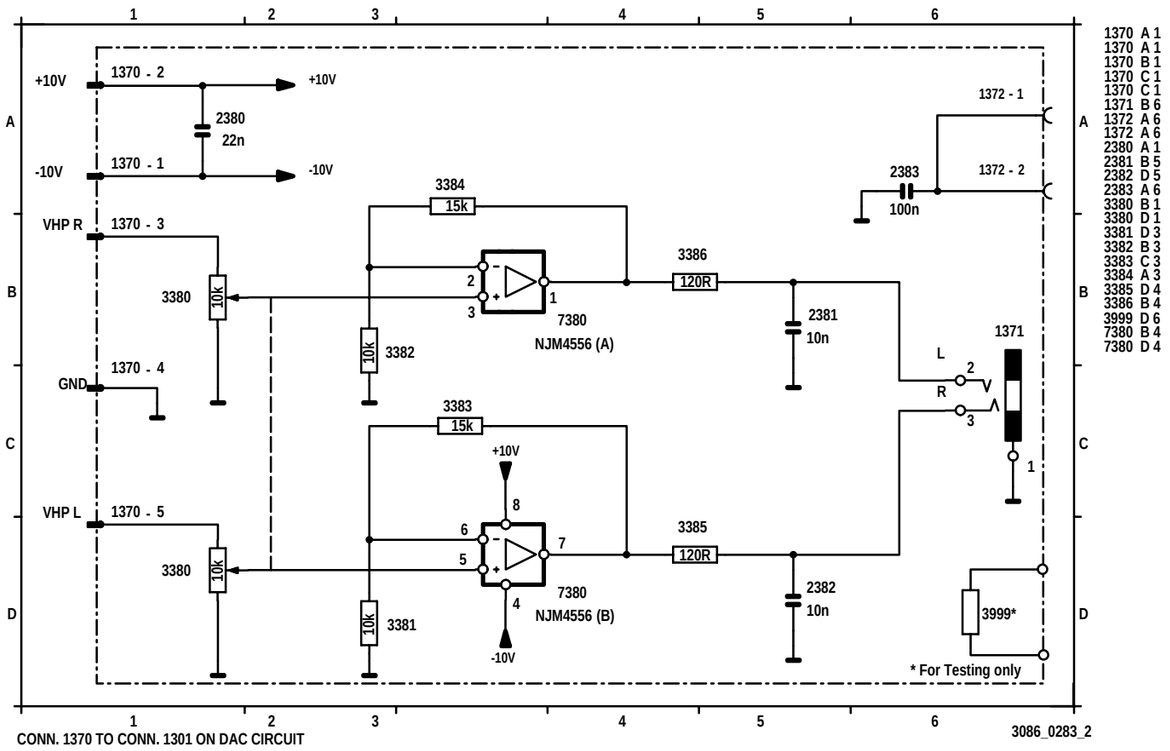

POWER SUPPLY CIRCUIT DIAGRAM

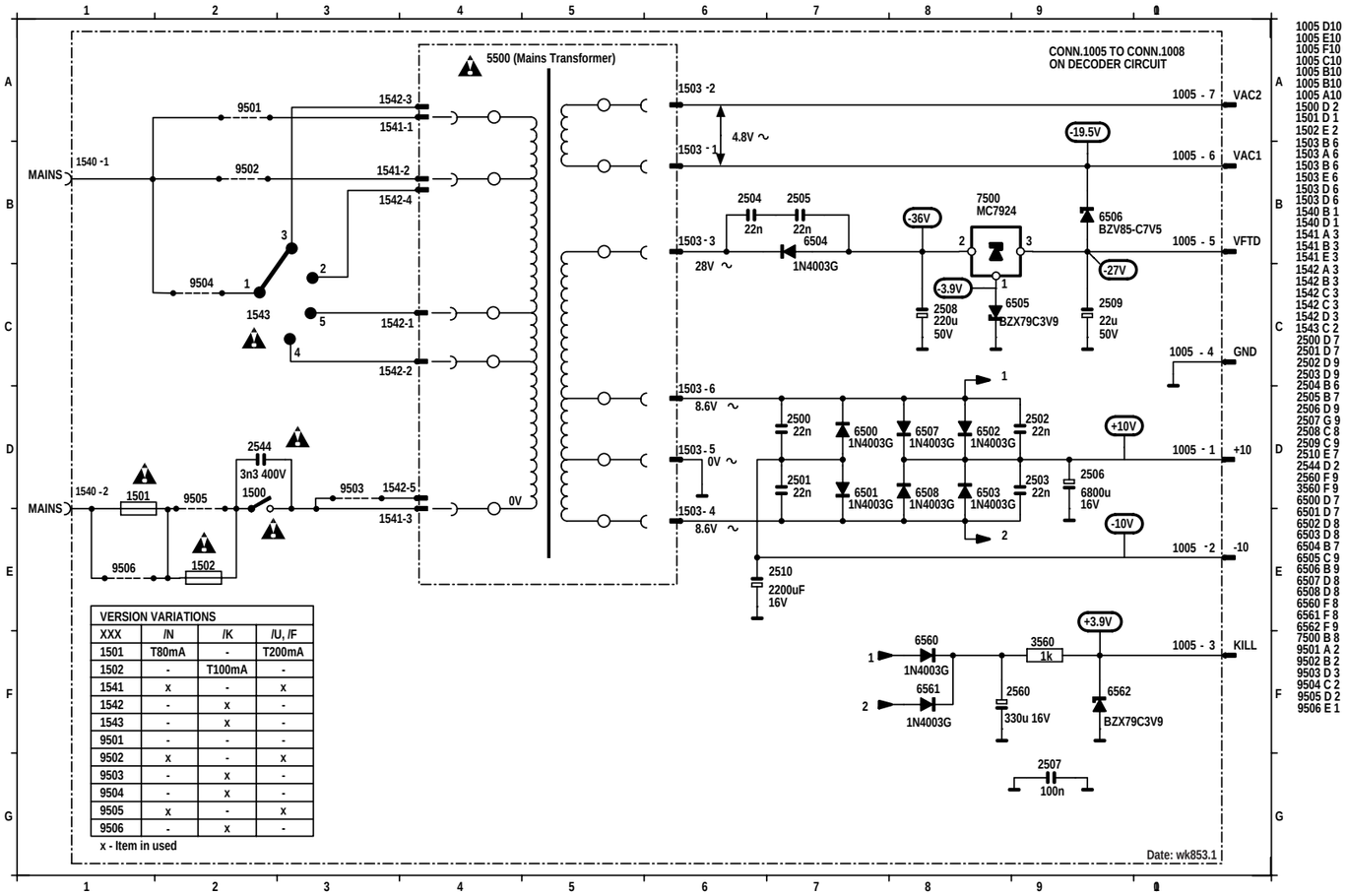

VERSION VARIATIONS			
XXX	/N	/K	/U, /F
1501	T80mA	-	T200mA
1502	-	T100mA	-
1541	x	-	x
1542	-	x	-
1543	-	x	-
9501	-	-	-
9502	x	-	x
9503	-	x	-
9504	-	x	-
9505	x	-	x
9506	-	x	-

x - Item in used

HEADPHONE & SUPPLY BOARD LAYOUT

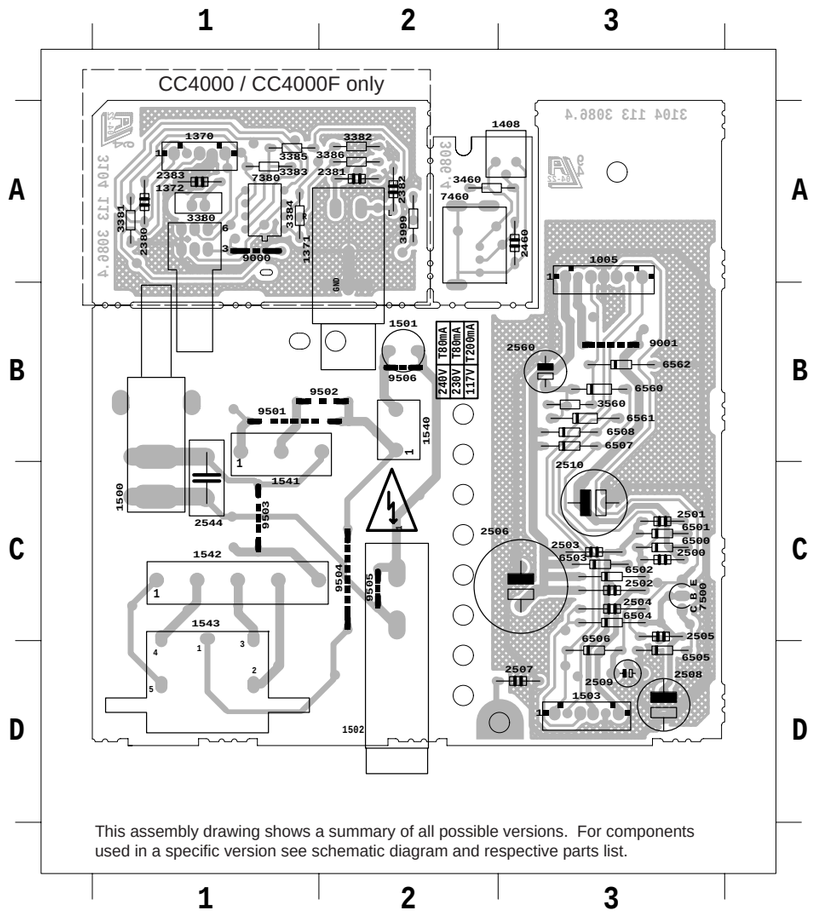

1005 A 3
1370 A 1
1371 A 2
1372 A 1
1408 A 3
1500 B 1
1501 B 2
1502 C 2
1503 D 3
1540 B 2
1541 B 1
1542 C 1
1543 D 1
2380 A 1
2381 A 2
2382 A 2
2383 A 1
2460 A 3
2500 C 3
2501 C 3
2502 C 3
2503 C 3
2504 C 3
2505 C 3
2506 C 3
2507 D 3
2508 D 3
2509 D 3
2510 C 3
2544 C 1
2560 B 3
3380 A 1
3381 A 1
3382 A 2
3383 A 1
3384 A 1
3385 A 1
3386 A 2
3460 A 2
3560 B 3
3999 A 2
6500 C 3
6501 C 3
6502 C 3
6503 C 3
6504 C 3
6505 D 3
6506 D 3
6507 B 3
6508 B 3
6560 B 3
6561 B 3
6562 B 3
7380 A 1
7460 A 2
7500 C 3
9000 A 1
9001 B 3
9501 B 1
9502 B 2
9503 C 1
9504 C 2
9505 C 2
9506 B 2

TRANSFORMER CONNECTIONS

/N VERSION

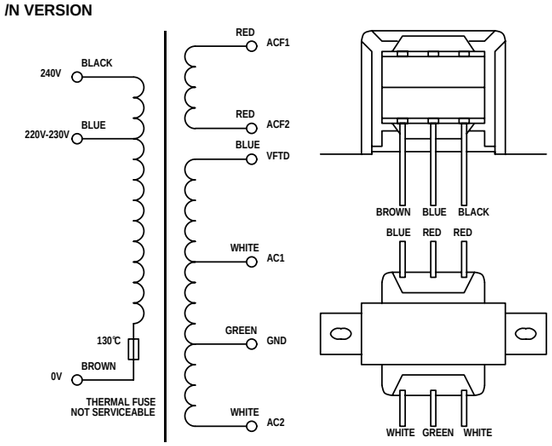

/U VERSION

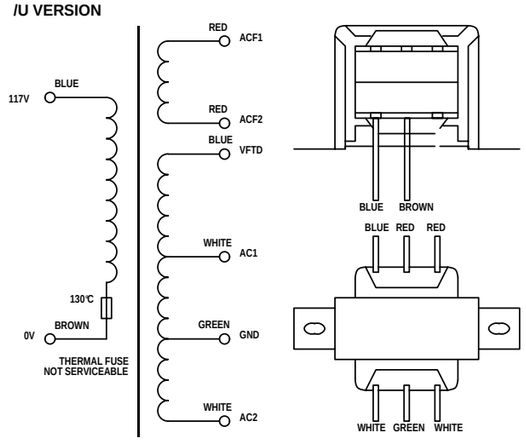

/K VERSION

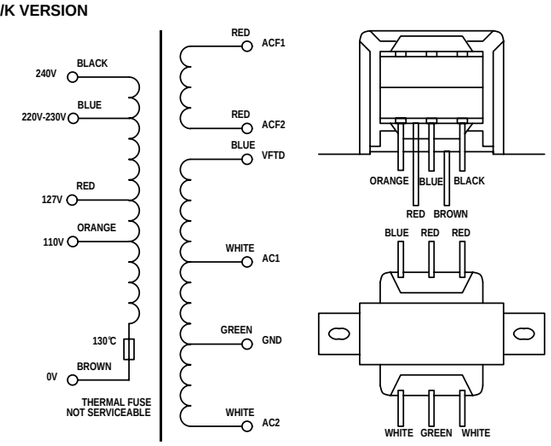

/F VERSION

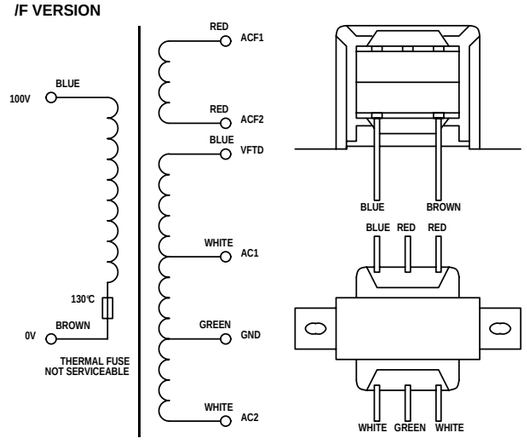

ELECTRICAL PARTS LIST - SUPPLY & HEADPHONE BOARD

MISCELLANEOUS

1371	482 2267 31453		Headphone Socket for CC4000, CC4000F
1500	482 2276 13224	⚠	Power Switch
1501	482 2252 51167	⚠	FUSE T200mA 250V for /U
1501	482 2071 58009	⚠	FUSE T80mA 250V for /N
1501	482 2071 52001	⚠	FUSE T200mA 250V for /F
1502	482 2070 31001	⚠	FUSE T100mA 250V for /K
1540	482 2265 20723	⚠	Socket. Primary Winding
1543	482 2277 11237	⚠	Voltage Selector for /K

CAPACITORS

2380	482 2126 11585		22nF+80-20% 25V for CC4000, CC4000F
2381	482 2121 51387		10nF20% 16V for CC4000, CC4000F
2382	482 2121 51387		10nF20% 16V for CC4000, CC4000F
2383	482 2126 12882		100nF+80-20% 50V for CC4000, CC4000F
2500	482 2126 11585		22nF+80-20% 25V
2501	482 2126 11585		22nF+80-20% 25V
2502	482 2126 11585		22nF+80-20% 25V
2503	482 2126 11585		22nF+80-20% 25V
2504	482 2126 11585		22nF+80-20% 25V
2505	482 2126 11585		22nF+80-20% 25V
2506	482 2124 12328		6800µF 16V
2507	482 2126 12882		100nF+80-20% 50V
2508	482 2124 11769		220µF 20% 50V
2509	482 2124 81151		22µF 50V
2510	482 2123 14025		2200U 20% 16V for CC4000
2510	482 2124 40723		2200µF 20% 16V for CC3000, CC4000F
2544	482 2126 14504	⚠	3.3nF 20% 250V
2560	482 2124 40849		330µF 20% 16V

RESISTORS

3380	482 2101 21199	10kX2 20% for CC4000, CC4000F
3381	482 2116 83864	10k 5% 0.5W for CC4000, CC4000F
3382	482 2116 83864	10k 5% 0.5W for CC4000, CC4000F
3383	482 2116 52244	15k 5% 0.5W for CC4000, CC4000F
3384	482 2116 52244	15k 5% 0.5W for CC4000, CC4000F
3385	482 2116 52206	120R 5% 0.5W for CC4000, CC4000F
3386	482 2116 52206	120R 5% 0.5W for CC4000, CC4000F
3560	482 2050 11002	1k 1% 0.4W
3999	482 2116 52303	8k2 5% 0.5W for /U, /F
3999	482 2116 52297	68k 5% 0.5W for /N
3999	482 2116 52228	680R 5% 0.5W for /K

DIODES

6500	482 2130 31878	1N4003G
6501	482 2130 31878	1N4003G
6502	482 2130 31878	1N4003G
6503	482 2130 31878	1N4003G
6504	482 2130 31878	1N4003G
6505	482 2130 31981	BZX79-B3V9
6506	532 2130 32586	BZV85-C7V5
6507	482 2130 31878	1N4003G
6508	482 2130 31878	1N4003G
6560	482 2130 31878	1N4003G
6561	482 2130 31878	1N4003G
6562	482 2130 31981	BZX79-B3V9

TRANSISTORS & INTEGRATED CIRCUITS

7380	482 2209 82362	NJM4556D for CC4000, CC4000F
7500	482 2209 31257	MC79L24ACP

Note: Only the parts mentioned in this list are normal service spare parts.

FRONT BOARD

TABLE OF CONTENTS

LCD Pin connections 7-1
Circuit diagram - Main part 7-2
Component & Chip layouts - Main part 7-3
Circuit diagram & layout - Open/Close part 7-3
Electrical parts list 7-4

LCD DISPLAY PIN CONNECTIONS

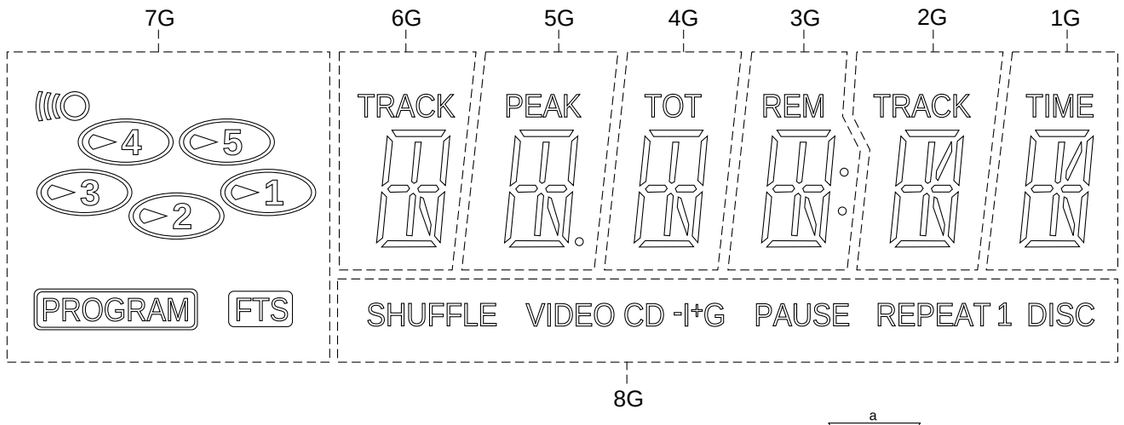

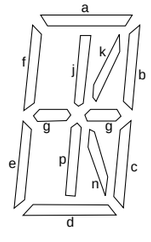

(6G - 1G)

	1G	2G	3G	4G	5G	6G	7G	8G
P1	TIME	TRACK	REM	TOT	PEAK	TRACK	1	SHUFFLE
P2	a	a	a	a	a	a	2	VIDEO
P3	b	b	b	b	b	b	3	CD
P4	f	f	f	f	f	f	4	-I
P5	j	j	j	j	j	j	5	+G
P6	k	k	• Dp	-	: Col	-	(((○	PAUSE
P7	g	g	g	g	g	g	PROGRAM	REPEAT
P8	c	c	c	c	c	c	FTS	1
P9	e	e	e	e	e	e	-	DISC
P10	p	p	p	p	p	p	-	-
P11	n	n	n	n	n	n	-	-
P12	d	d	d	d	d	d	-	-

7-2

CIRCUIT DIAGRAM - MAIN PART

42 D14	1405 F1	1410 D10	1415 E11	1419 C13	1423 D12	2401 C2	2405 F6	2409 G7	2413 C9	2417 F10	2421 E4	3402 C2	3408 G9	3412 F8	3416 F5	3420 F5	3424 E4	3428 D9	3432 E9	3436 C12	3440 D12	3444 E12	3448 F11	3452 D13	3456 D2	3460 F9	3464 D3	5401 D4	7409 H9
1400 A5	1407 C11	1411 D11	1416 E11	1420 E12	1424 F12	2402 D2	2406 F6	2410 G7	2414 C10	2418 F1	2422 E4	3405 F8	3409 G7	3413 F6	3417 F5	3421 E3	3425 E3	3429 E9	3433 B10	3437 C10	3441 E10	3445 E12	3449 F11	3453 G3	3457 D2	3461 F9	3465 D4	6401 F9	7410 F9
1403 D1	1408 D11	1412 C11	1417 F11	1421 C12	1425 F12	2403 D3	2407 G6	2411 G8	2415 D10	2419 D4	2423 E4	3406 F8	3410 G7	3414 F6	3418 F5	3422 E4	3426 D4	3430 E9	3434 C11	3438 D11	3442 E11	3446 C13	3450 F12	3454 D12	3458 D3	3462 F9	3466 D2	7401 E4	7411 F7
1404 G1	1409 C12	1414 E10	1418 E12	1422 D12	1427 C10	2404 G1	2408 G7	2412 G8	2416 E10	2420 D4	3401 C2	3407 G9	3411 G7	3415 F6	3419 F5	3423 E3	3427 C9	3431 E9	3435 C11	3439 D11	3443 E11	3447 F10	3451 F12	3455 C12	3459 E13	3463 F7	5400 F6	7408 G7	9480 C9

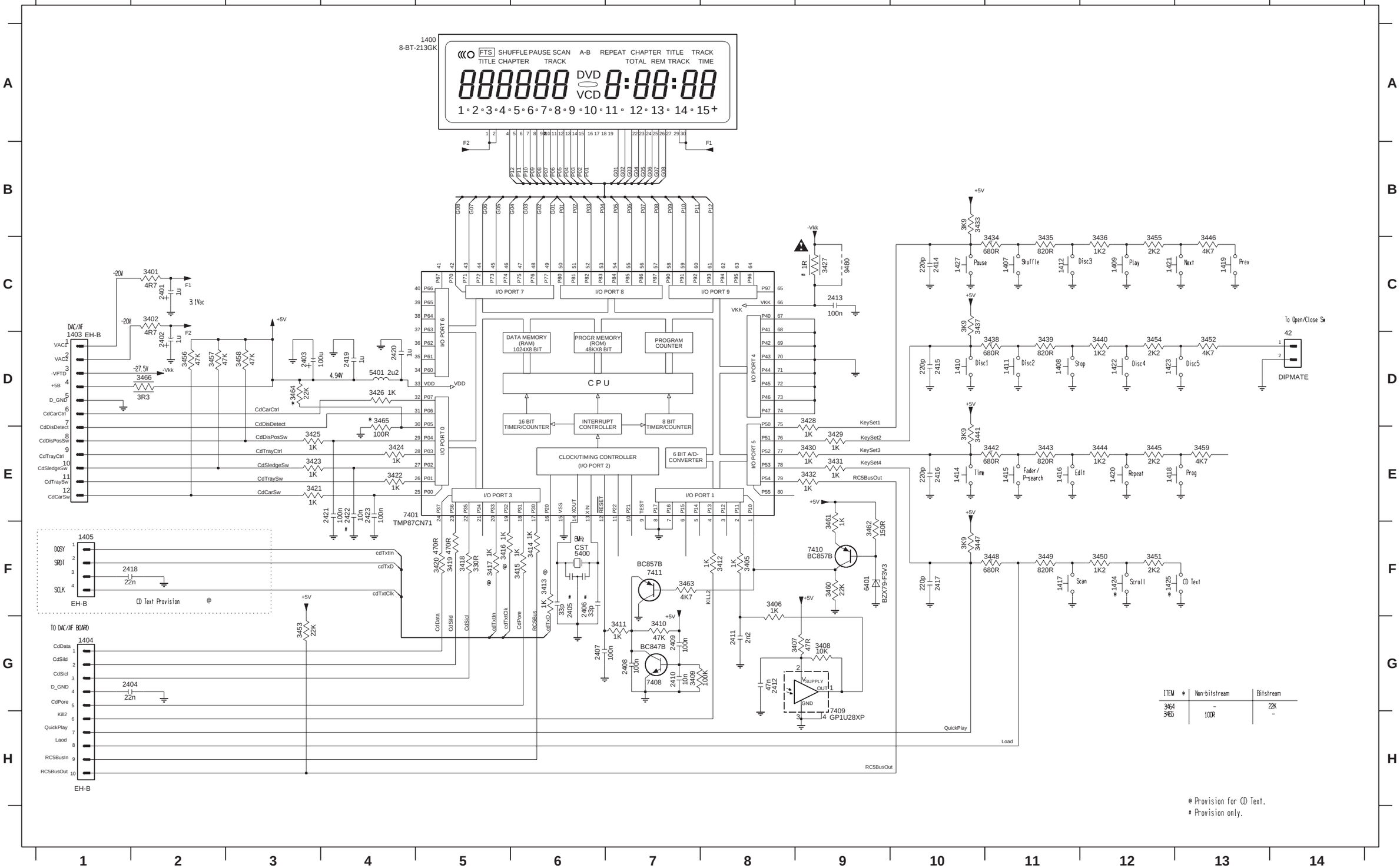

ITEM	*	Non-bitstream	Bitstream
3464		-	22K
3465		100R	-

7-3

COMPONENT & CHIP LAYOUTS - MAIN PART

42 A15 1405 A3 1410 A13 1415 A2 1419 A13 1423 A15 2401 A10 3402 A3 3420 A4 3440 A14 5400 A6 9402 A3 9406 A4 9410 A5 9414 A6 9418 A8 9422 A8 9427 A9 9431 A10 9435 A11 9440 A10
1400 A7 1407 A12 1411 A13 1416 A1 1420 A2 1424 A4 2402 A5 3406 A5 3427 A5 3455 A13 5401 A7 9403 A2 9407 A4 9411 A5 9415 A8 9419 A8 9423 A9 9428 A11 9432 A10 9436 A11 9441 A10
1403 A9 1408 A14 1412 A14 1417 A2 1421 A13 1425 A3 2403 A8 3412 A4 3429 A7 3456 A11 6401 A9 9404 A3 9408 A4 9412 A4 9416 A7 9420 A8 9424 A8 9429 A11 9433 A9 9437 A5 9480 A4
1404 A4 1409 A15 1414 A2 1418 A1 1422 A14 1427 A12 3401 A10 3419 A5 3437 A13 3466 A9 7409 A10 9405 A8 9409 A4 9413 A6 9417 A4 9421 A8 9425 A10 9430 A10 9434 A14 9438 A10

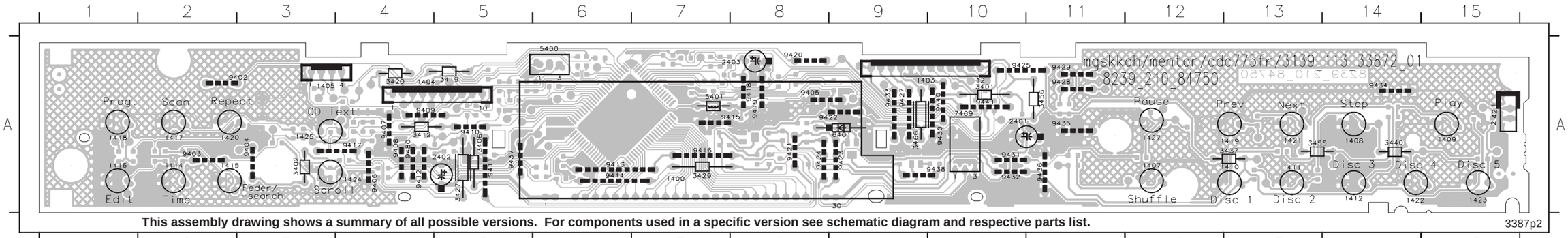

This assembly drawing shows a summary of all possible versions. For components used in a specific version see schematic diagram and respective parts list.

3387p2

2404 A4 2409 A8 2414 A12 2419 A8 3405 A5 3411 A5 3417 A6 3424 A7 3431 A6 3436 A14 3443 A2 3448 A4 3453 A4 3460 A9 3465 A7 4405 A4 4410 A5 4415 A5 4420 A8 4425 A4 4430 A4 7408 A8
2405 A5 2410 A4 2415 A15 2420 A7 3407 A8 3413 A5 3418 A6 3425 A7 3432 A5 3438 A13 3444 A2 3449 A4 3454 A15 3461 A8 4401 A3 4406 A4 4411 A5 4416 A5 4421 A8 4426 A9 4431 A10 7410 A9
2406 A5 2411 A5 2416 A3 2421 A7 3408 A8 3414 A5 3421 A7 3426 A7 3433 A12 3439 A13 3445 A1 3450 A3 3457 A8 3462 A9 4402 A3 4407 A3 4412 A5 4417 A6 4422 A10 4427 A10 4432 A11 7411 A9
2407 A5 2412 A8 2417 A3 2422 A7 3409 A4 3415 A6 3422 A7 3428 A6 3434 A11 3441 A11 3446 A13 3451 A3 3458 A10 3463 A10 4403 A3 4408 A4 4413 A3 4418 A6 4423 A10 4428 A13 4433 A8
2408 A7 2413 A6 2418 A3 2423 A7 3410 A7 3416 A6 3423 A7 3430 A6 3435 A11 3442 A2 3447 A11 3452 A15 3459 A1 3464 A7 4404 A4 4409 A5 4414 A5 4419 A8 4424 A14 4429 A12 7401 A6

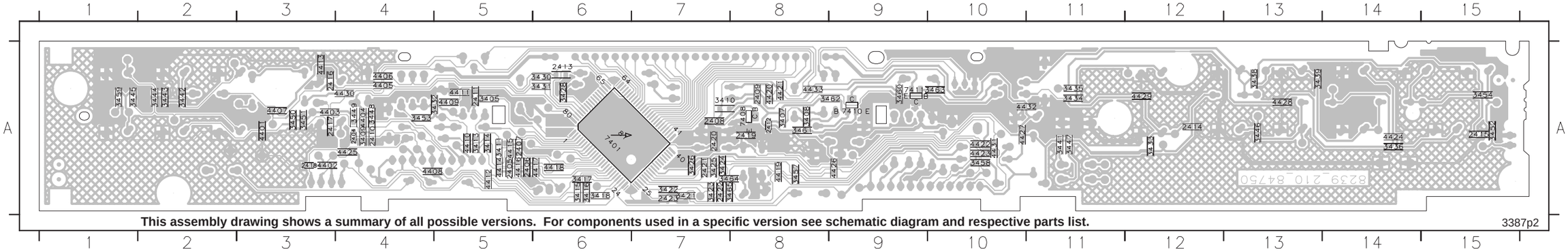

This assembly drawing shows a summary of all possible versions. For components used in a specific version see schematic diagram and respective parts list.

3387p2

CIRCUIT & LAYOUT - OPEN/CLOSE PART

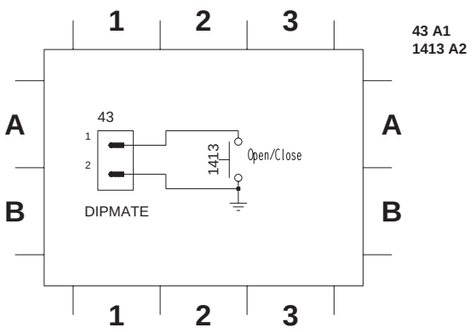

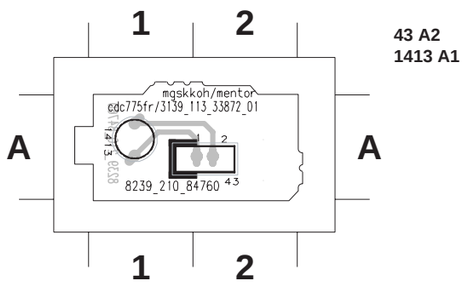

7-4

ELECTRICAL PARTS LIST - FRONT BOARD

MISCELLANEOUS

1400	3139 110 51990	FTD Display
1407	4822 276 13775	Tact Switch
1408	4822 276 13775	Tact Switch
1409	4822 276 13775	Tact Switch
1410	4822 276 13775	Tact Switch
1411	4822 276 13775	Tact Switch
1412	4822 276 13775	Tact Switch
1413	4822 276 13775	Tact Switch
1414	4822 276 13775	Tact Switch
1415	4822 276 13775	Tact Switch
1416	4822 276 13775	Tact Switch
1417	4822 276 13775	Tact Switch
1418	4822 276 13775	Tact Switch
1419	4822 276 13775	Tact Switch
1420	4822 276 13775	Tact Switch
1421	4822 276 13775	Tact Switch
1422	4822 276 13775	Tact Switch
1423	4822 276 13775	Tact Switch
1427	4822 276 13775	Tact Switch

CAPACITORS

2401	4822 124 22651	1µF 20% 50V
2402	4822 124 22651	1µF 20% 50V
2403	4822 124 42234	100µF 20% 6,3V
2404	5322 122 32654	22nF 10% 63V
2407	4822 126 14585	100nF 10% 50V
2408	4822 126 13838	100nF 20% 50V
2409	4822 126 13838	100nF 20% 50V
2410	4822 122 33177	10nF 20% 50V
2411	4822 122 33127	2,2nF 10% 50V
2412	4822 126 13751	47nF 10% 50V
2413	4822 126 13838	100nF 20% 50V
2414	4822 122 33575	220pF 5% 50V
2415	4822 122 33575	220pF 5% 50V
2416	4822 122 33575	220pF 5% 50V
2417	4822 122 33575	220pF 5% 50V
2418	5322 122 32654	22nF 10% 63V
2419	4822 126 14043	1µF 16V

RESISTORS

3401	4822 050 24708	4R7 1% 0,6W
3402	4822 050 24708	4R7 1% 0,6W
3405	4822 051 10102	1k 2% 0,25W
3406	4822 050 11002	1k 1% 0,4W
3407	4822 051 20479	47R 5% 0,1W
3408	4822 117 10833	10k 1% 0,1W
3409	4822 117 10837	100k 1% 0,1W
3410	4822 117 10834	47k 1% 0,1W
3411	4822 051 10102	1k 2% 0,25W
3412	4822 050 11002	1k 1% 0,4W
3413	4822 051 10102	1k 2% 0,25W
3414	4822 051 10102	1k 2% 0,25W
3415	4822 051 10102	1k 2% 0,25W
3416	4822 051 10102	1k 2% 0,25W
3417	4822 051 10102	1k 2% 0,25W
3418	4822 117 13577	330R 1% 0,25W
3419	4822 116 83883	470R 5% 0,5W
3420	4822 116 83883	470R 5% 0,5W
3421	4822 051 10102	1k 2% 0,25W
3422	4822 051 10102	1k 2% 0,25W
3423	4822 051 10102	1k 2% 0,25W
3424	4822 051 10102	1k 2% 0,25W
3425	4822 051 10102	1k 2% 0,25W
3426	4822 051 10102	1k 2% 0,25W
3428	4822 051 10102	1k 2% 0,25W
3429	4822 050 11002	1k 1% 0,4W
3430	4822 051 10102	1k 2% 0,25W
3431	4822 051 10102	1k 2% 0,25W
3432	4822 051 10102	1k 2% 0,25W
3433	4822 051 20392	3k9 5% 0,1W
3434	4822 117 10361	680R 1% 0,1W
3435	4822 117 11454	820R 1% 0,1W
3436	4822 051 20122	1k2 5% 0,1W
3437	4822 116 52276	3k9 5% 0,5W
3438	4822 117 10361	680R 1% 0,1W
3439	4822 117 11454	820R 1% 0,1W
3440	4822 116 52207	1k2 5% 0,5W
3441	4822 051 20392	3k9 5% 0,1W
3442	4822 117 10361	680R 1% 0,1W
3443	4822 117 11454	820R 1% 0,1W
3444	4822 051 20122	1k2 5% 0,1W
3445	4822 117 11449	2k2 1% 0,1W
3446	4822 051 20472	4k7 5% 0,1W
3447	4822 051 20392	3k9 5% 0,1W
3448	4822 117 10361	680R 1% 0,1W
3449	4822 117 11454	820R 1% 0,1W
3450	4822 051 20122	1k2 5% 0,1W
3451	4822 117 11449	2k2 1% 0,1W
3452	4822 051 20472	4k7 5% 0,1W
3453	4822 051 20223	22k 5% 0,1W
3454	4822 117 11449	2k2 1% 0,1W
3455	4822 116 52256	2k2 5% 0,5W
3456	4822 116 83884	47k 5% 0,5W
3457	4822 117 10834	47k 5% 0,1W
3458	4822 117 10834	47k 5% 0,1W
3459	4822 051 20472	4k7 5% 0,1W
3460	4822 051 20223	22k 5% 0,1W
3461	4822 051 10102	1k 2% 0,25W
3462	4822 117 10353	150R 1% 0,1W
3463	4822 051 20472	4k7 5% 0,1W
3464	4822 051 20223	22k 5% 0,1W for CC4000, CC4000F
3465	4822 051 20101	100R 5% 0,1W for CC3000
3466	4822 052 10338	3R3 5% 0,33W
4401	4822 051 20008	0R Jumper 0805
4402	4822 051 20008	0R Jumper 0805
4403	4822 051 20008	0R Jumper 0805
4404	4822 051 20008	0R Jumper 0805
4405	4822 051 20008	0R Jumper 0805
4406	4822 051 20008	0R Jumper 0805
4407	4822 051 20008	0R Jumper 0805
4408	4822 051 20008	0R Jumper 0805
4409	4822 051 20008	0R Jumper 0805
4410	4822 051 20008	0R Jumper 0805
4411	4822 051 20008	0R Jumper 0805
4412	4822 051 20008	0R Jumper 0805
4413	4822 051 20008	0R Jumper 0805
4414	4822 051 20008	0R Jumper 0805
4415	4822 051 20008	0R Jumper 0805
4416	4822 051 20008	0R Jumper 0805
4417	4822 051 20008	0R Jumper 0805
4418	4822 051 20008	0R Jumper 0805
4419	4822 051 20008	0R Jumper 0805
4420	4822 051 20008	0R Jumper 0805
4421	4822 051 20008	0R Jumper 0805
4422	4822 051 20008	0R Jumper 0805
4423	4822 051 20008	0R Jumper 0805
4424	4822 051 20008	0R Jumper 0805
4425	4822 051 20008	0R Jumper 0805
4426	4822 051 20008	0R Jumper 0805
4427	4822 051 20008	0R Jumper 0805
4428	4822 051 20008	0R Jumper 0805
4429	4822 051 20008	0R Jumper 0805
4430	4822 051 20008	0R Jumper 0805
4431	4822 051 20008	0R Jumper 0805
4432	4822 051 20008	0R Jumper 0805
4433	4822 051 20008	0R Jumper 0805

COILS & FILTERS

5400	4822 242 72066	Ceram Resonator 8MHz
5401	4822 157 11477	Coil 2,2µH 5%

DIODES

6401	4822 130 31981	BZX79-B3V9

TRANSISTORS & INTEGRATED CIRCUITS

7401	3139 110 52000	TMP87CP71F
7408	5322 130 60159	BC846B
7409	4822 130 10165	GP1U28XP
7410	4822 130 60373	BC856B
7411	4822 130 60373	BC856B

Note: Only the parts mentioned in this list are normal service spare parts.

SERVO/DECODER BOARD

TABLE OF CONTENTS

Circuit diagram & layout - Load/Quick Play part 8-1
Circuit diagram - Main part 8-2
Component & Chip layouts - Main part 8-3
Electrical parts list..... 8-4

CIRCUIT DIAGRAM & LAYOUT - LOAD/QP PART

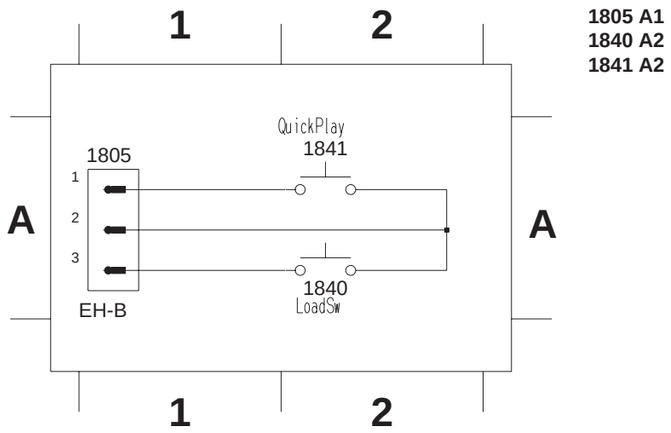

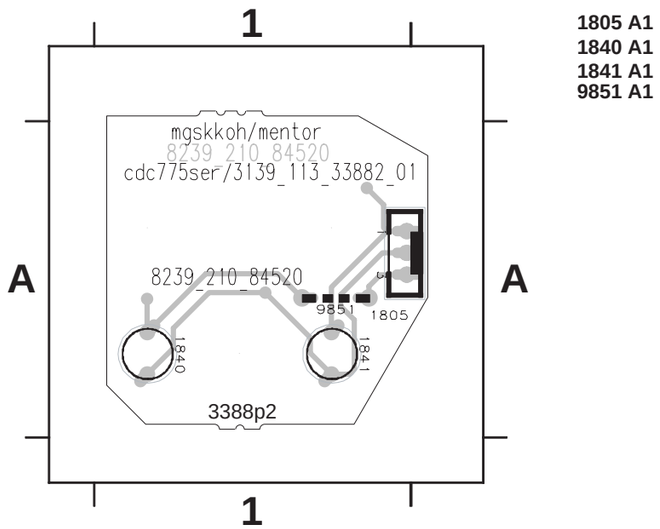

8-2

CIRCUIT DIAGRAM - MAIN PART

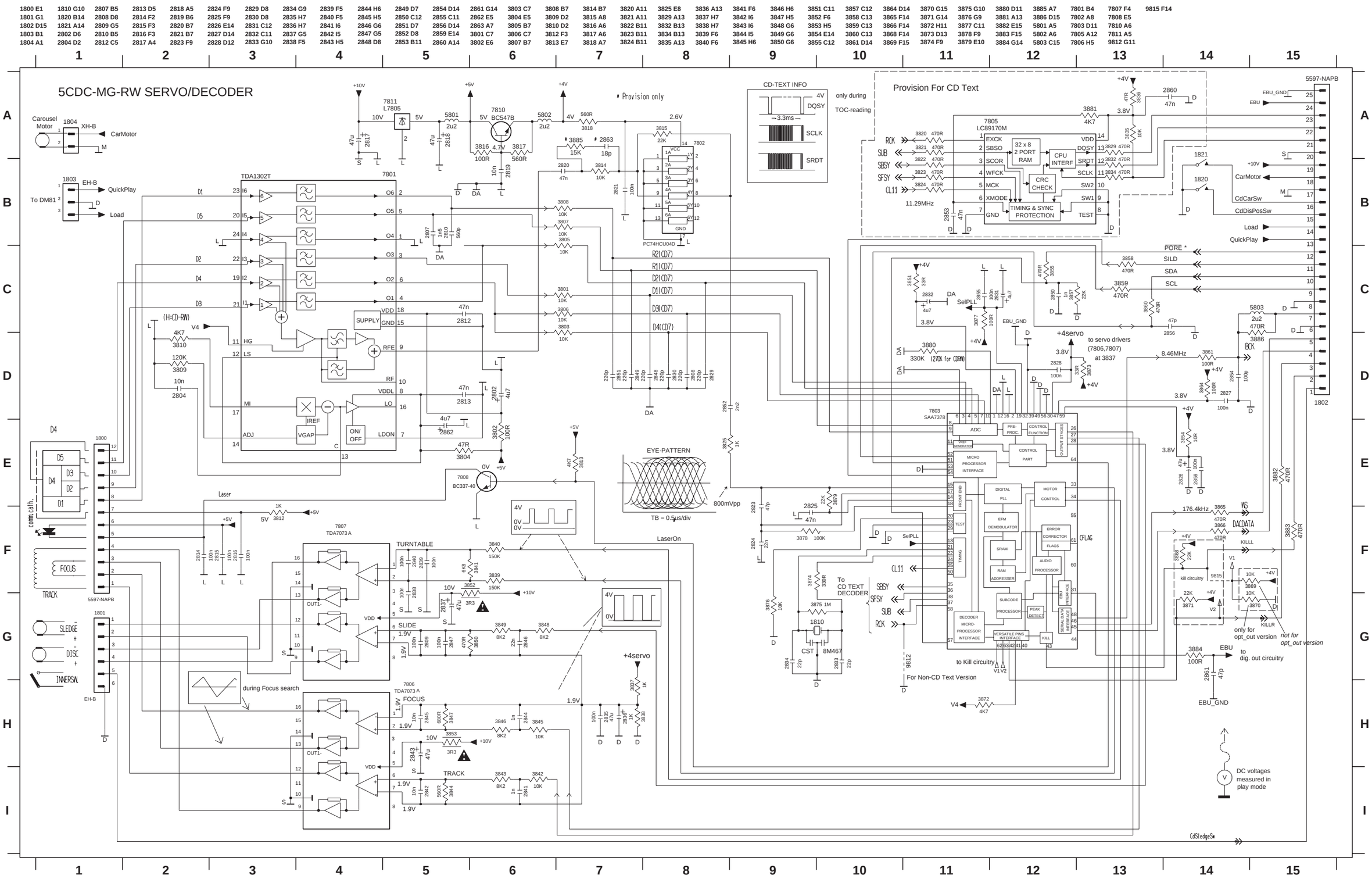

COMPONENT & CHIP LAYOUTS - MAIN PART

1800 D1	2817 B3	3801 D2	3852 A2	3873 C1	9802 A3	9813 B2	9822 A3	9834 B3
1801 A1	2818 C3	3803 D2	3853 B1	5801 C3	9803 A2	9814 B2	9823 A3	9835 B3
1802 B3	2826 B3	3807 C2	3858 B3	5802 C3	9804 B2	9815 B2	9824 B3	9836 C3
1803 A2	2831 C2	3808 D2	3859 B3	7806 B1	9806 B2	9816 B2	9825 B3	9837 A1
1804 A2	2832 C3	3814 D3	3868 B2	7807 A1	9807 B1	9817 C2	9826 B3	9838 C3
1810 C2	2836 A2	3818 C3	3869 B3	7808 D1	9808 D1	9818 B2	9827 B3	9840 C2
1820 A3	2837 B1	3824 C2	3870 C3	7810 C3	9809 D1	9819 A2	9828 C3	9841 C3
1821 C3	2843 B1	3825 C3	3871 B3	7811 C3	9810 D2	9820 A3	9831 D3	
2802 D2	2862 D2	3851 C3	3872 D2	9801 C1	9812 A2	9821 A3	9833 A3	

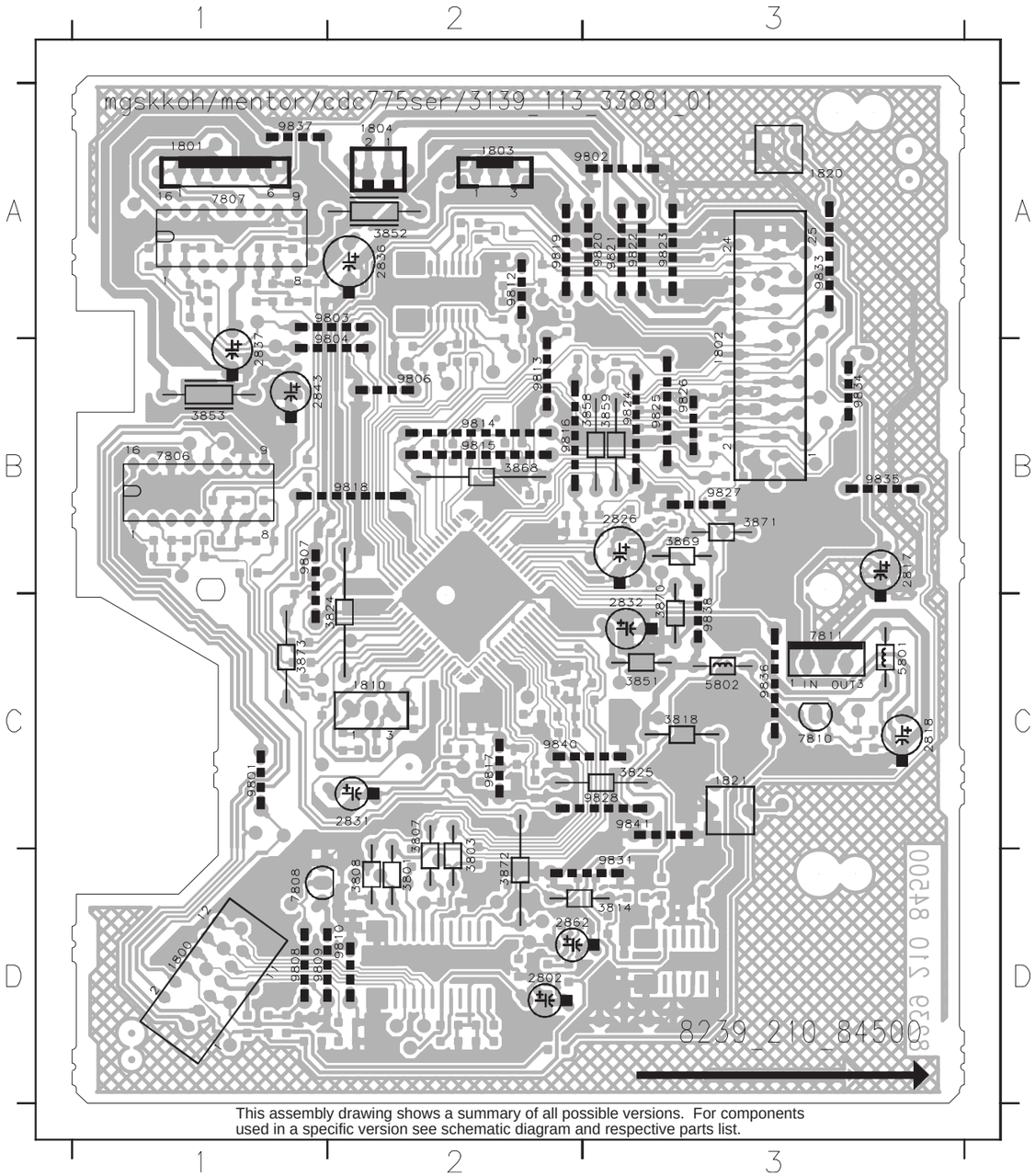

This assembly drawing shows a summary of all possible versions. For components used in a specific version see schematic diagram and respective parts list.

8-3

2804 D2	2823 C2	2841 B3	2855 C2	3813 D3	3837 B3	3850 A3	3878 C2	4806 B2
2807 D2	2824 C2	2842 B3	2856 B1	3815 D1	3838 A3	3854 B1	3879 C2	4809 B1
2808 C1	2825 C2	2844 B3	2859 B1	3816 C1	3839 A3	3855 B1	3880 C2	4810 D2
2809 A3	2827 B2	2845 B3	2860 A2	3817 C1	3840 A3	3857 B2	3881 A2	4813 B1
2810 D2	2828 C3	2846 A3	2861 B2	3820 B2	3841 A3	3860 B1	3882 B1	4814 C2
2812 D2	2829 C2	2847 A3	2863 D1	3821 B2	3842 C3	3861 B2	3883 B1	4815 B3
2813 D2	2830 C2	2848 C1	3802 D2	3822 B2	3843 B3	3864 B2	3884 B3	4816 B3
2814 D2	2833 C2	2849 C2	3804 D2	3823 B2	3844 B3	3865 B2	3885 D1	5803 B1
2815 D3	2834 C2	2850 B2	3805 D2	3829 A2	3845 C3	3866 B2	3886 B1	7801 D2
2816 D2	2835 A3	2851 C2	3806 D2	3832 A2	3846 B3	3874 C2	4801 D3	7802 D1
2819 C1	2838 A3	2852 D1	3809 D2	3834 A2	3847 B3	3875 C2	4802 D2	7803 B2
2820 D2	2839 A3	2853 B2	3810 D2	3835 A2	3848 C3	3876 C2	4803 D1	7805 A2
2821 D1	2840 A3	2854 B2	3812 D3	3836 A2	3849 A3	3877 C2	4805 A1	

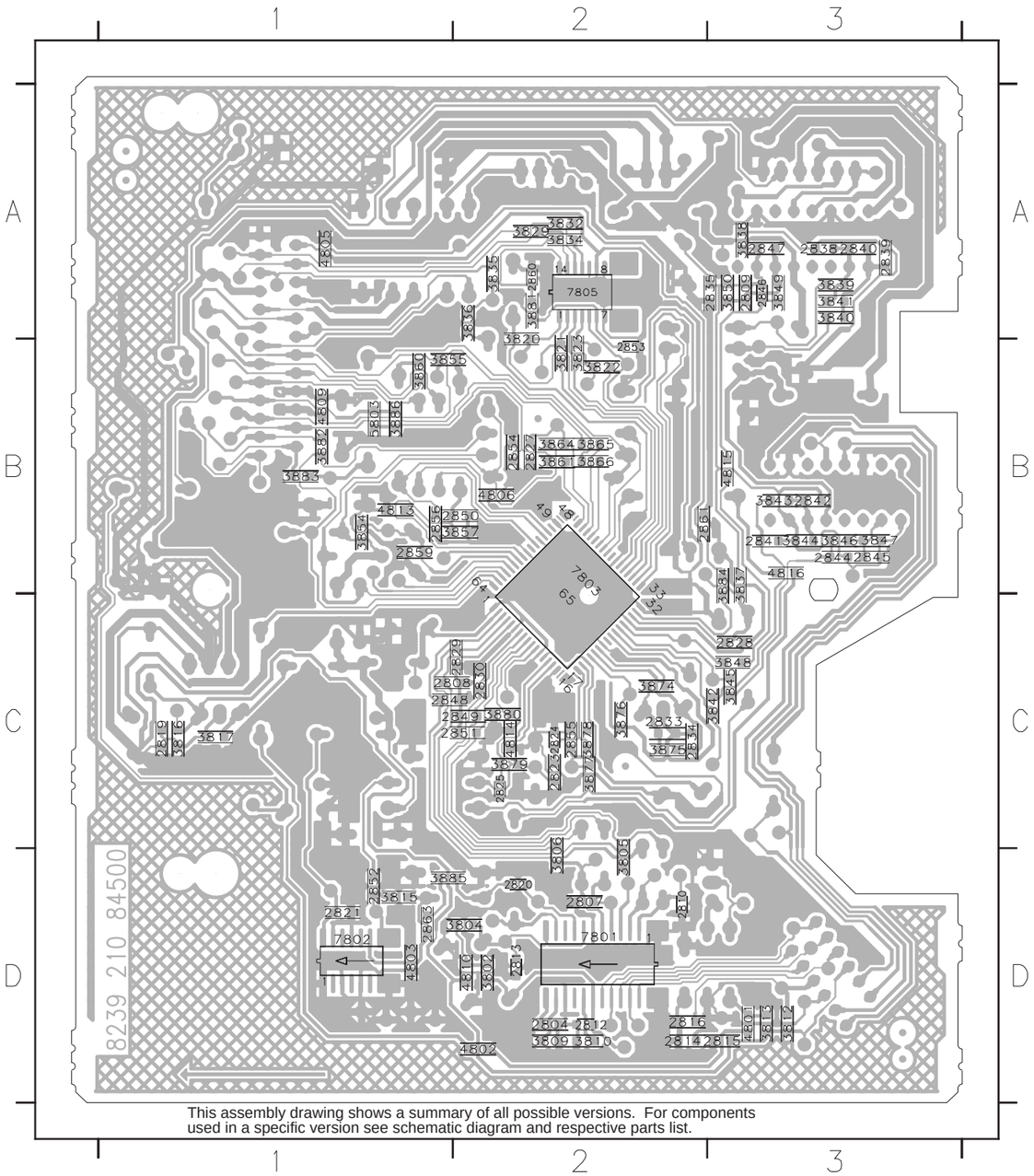

This assembly drawing shows a summary of all possible versions. For components used in a specific version see schematic diagram and respective parts list.

8-4

ELECTRICAL PARTS LIST - SERVO/DECODER BOARD

MISCELLANEOUS

1800	4822 267 51453	Flex Socket 12Pin Hort.
1802	4822 265 11556	Flex Socket 25Pin Hort.
1810	4822 242 10566	X'tal Resonator 8.4672MHz
1820	4822 276 13106	Tact Switch
1821	4822 276 13106	Tact Switch
1840	4822 276 13775	Tact Switch
1841	4822 276 13775	Tact Switch

CAPACITORS

2802	4822 124 40769	4,7µF 20% 100V
2804	4822 122 33177	10nF 20% 50V
2807	5322 122 31865	1,5nF 10% 63V
2808	4822 122 33575	220pF 5% 50V
2809	4822 126 13296	100nF 10% 16V
2810	5322 116 80853	560pF 5% 63V
2812	4822 126 13751	47nF 10% 63V
2813	4822 126 13751	47nF 10% 63V
2814	4822 126 13296	100nF 10% 16V
2815	4822 126 13296	100nF 10% 16V
2816	4822 126 13296	100nF 10% 16V
2817	4822 124 80231	47µF 20% 16V
2818	4822 124 80231	47µF 20% 16V
2819	4822 122 33177	10nF 20% 50V
2820	4822 126 13751	47nF 10% 63V
2821	4822 126 13296	100nF 10% 16V
2823	4822 126 13692	47pF 1% 63V
2824	5322 122 32654	22nF 10% 63V
2825	4822 126 13751	47nF 10% 63V
2826	4822 124 80231	47µF 20% 16V
2827	4822 126 13296	100nF 10% 16V
2828	4822 126 13296	100nF 10% 16V
2829	4822 122 33575	220pF 5% 50V
2830	4822 122 33575	220pF 5% 50V
2831	4822 124 40769	4,7µF 20% 100V
2832	4822 124 40769	4,7µF 20% 100V
2833	5322 122 32658	22pF 5% 50V
2834	5322 122 32658	22pF 5% 50V
2835	4822 126 13296	100nF 10% 16V
2836	4822 124 80231	47µF 20% 16V
2837	4822 124 80231	47µF 20% 16V
2838	4822 126 13296	100nF 10% 16V
2839	4822 126 13296	100nF 10% 16V
2840	4822 126 13296	100nF 10% 16V
2841	5322 126 10511	1nF 5% 50V
2842	4822 122 33177	10nF 20% 50V
2843	4822 124 80231	47µF 20% 16V
2844	5322 126 10511	1nF 5% 50V
2845	4822 122 33177	10nF 20% 50V
2846	5322 122 32654	22nF 10% 63V
2847	4822 126 13296	100nF 10% 16V
2848	4822 122 33575	220pF 5% 50V
2849	4822 122 33575	220pF 5% 50V
2850	5322 122 34123	1nF 10% 50V
2851	4822 122 33575	220pF 5% 50V
2852	4822 122 33175	2,2nF 20% 50V
2854	5322 122 32531	100pF 5% 50V
2855	4822 126 13196	100nF 10% 25V
2856	4822 126 13692	47pF 1% 63V
2859	4822 126 13296	100nF 10% 16V
2861	4822 126 13692	47pF 1% 63V
2862	4822 124 40769	4,7µF 20% 100V
2863	4822 126 13689	18pF 1% 63V

RESISTORS

3801	4822 116 83864	10k 5% 0,5W
3802	4822 051 20101	100R 5% 0,1W
3803	4822 116 83864	10k 5% 0,5W
3804	4822 051 20479	47R 5% 0,1W
3805	4822 117 10833	10k 1% 0,1W
3806	4822 117 10833	10k 1% 0,1W
3807	4822 116 83864	10k 5% 0,5W
3808	4822 116 83864	10k 5% 0,5W
3809	4822 051 20124	120k 5% 0,1W
3810	4822 051 20472	4k7 5% 0,1W
3812	4822 051 10102	1k 2% 0,25W
3813	4822 051 20472	4k7 5% 0,1W
3814	4822 116 83864	10k 5% 0,5W
3815	4822 051 20223	22k 5% 0,1W
3816	4822 051 20101	100R 5% 0,1W
3817	4822 051 20561	560R 5% 0,1W
3818	4822 116 52226	560R 5% 0,5W
3825	4822 050 11002	1k 1% 0,4W
3837	4822 051 10102	1k 2% 0,25W
3838	4822 051 10102	1k 2% 0,25W
3839	4822 051 20154	150k 5% 0,1W
3840	4822 051 20154	150k 5% 0,1W
3841	4822 117 11507	6k8 1% 0,1W
3842	4822 117 10833	10k 1% 0,1W
3843	4822 051 20822	8k2 5% 0,1W
3844	4822 051 20561	560R 5% 0,1W
3845	4822 117 10833	10k 1% 0,1W
3846	4822 051 20822	8k2 5% 0,1W
3847	4822 051 20681	680R 5% 0,1W
3848	4822 051 20822	8k2 5% 0,1W
3849	4822 051 20822	8k2 5% 0,1W
3850	4822 051 20471	470R 5% 0,1W
3851	4822 116 52191	33R 5% 0,5W
3852	4822 052 10338 ⚠	3R3 5% 0,33W
3853	4822 052 10338 ⚠	3R3 5% 0,33W
3854	4822 051 20109	10R 5% 0,1W
3855	4822 051 20471	470R 5% 0,1W
3857	4822 051 20223	22k 5% 0,1W
3858	4822 116 83883	470R 5% 0,5W
3859	4822 116 83883	470R 5% 0,5W
3860	4822 051 20471	470R 5% 0,1W
3861	4822 051 20101	100R 5% 0,1W
3864	4822 051 20101	100R 5% 0,1W
3865	4822 051 20471	470R 5% 0,1W
3866	4822 051 20471	470R 5% 0,1W
3868	4822 116 52257	22k 5% 0,5W
3869	4822 116 83864	10k 5% 0,5W
3871	4822 116 52257	22k 5% 0,5W
3872	4822 116 52283	4k7 5% 0,5W
3873	4822 116 52191	33R 5% 0,5W
3874	4822 051 20331	330R 5% 0,1W
3875	4822 051 20105	1M 5% 0,1W
3876	4822 117 10833	10k 1% 0,1W
3877	4822 051 20101	100R 5% 0,1W
3878	4822 051 20104	100k 5% 0,1W
3879	4822 051 20223	22k 5% 0,1W
3880	4822 051 20274	270k 5% 0,1W
3882	4822 051 20471	470R 5% 0,1W
3883	4822 051 20471	470R 5% 0,1W
3884	4822 051 20101	100R 5% 0,1W
3885	4822 051 20153	15k 5% 0,1W
3886	4822 051 20453	470R 5% 0,1W
4801	4822 051 20008	0R Jumper 0805
4802	4822 051 20008	0R Jumper 0805
4803	4822 051 20008	0R Jumper 0805
4805	4822 051 20008	0R Jumper 0805
4806	4822 051 20008	0R Jumper 0805
4809	4822 051 20008	0R Jumper 0805
4810	4822 051 20008	0R Jumper 0805
4813	4822 051 20008	0R Jumper 0805
4814	4822 051 20008	0R Jumper 0805
4815	4822 051 20008	0R Jumper 0805
4816	4822 051 20008	0R Jumper 0805

COILS & FILTERS

5801	4822 157 11477	Coil 2,2µH 5%
5802	4822 157 11477	Coil 2,2µH 5%
5803	4822 157 10586	Coil 2,2µH 10% 0805

TRANSISTORS & INTEGRATED CIRCUITS

7801	4822 209 12636	TDA1302T/N1
7802	5322 209 11517	PC74HCU04T
7803	4822 209 12752	SAA7378GP/M1
7806	4822 209 32852	TDA7073A/N2
7807	4822 209 32852	TDA7073A/N2
7808	4822 130 41344	BC337-40
7810	4822 130 40959	BC547B
7811	4822 209 80817	L7805CV

Note: Only the parts mentioned in this list are normal service spare parts.

DAC/AF BOARD

TABLE OF CONTENTS

Notes 9-1
Circuit diagram 9-2
Component & Chip layouts 9-3
Electrical parts list 9-4

9-1

Notes:

9-2

CIRCUIT DIAGRAM

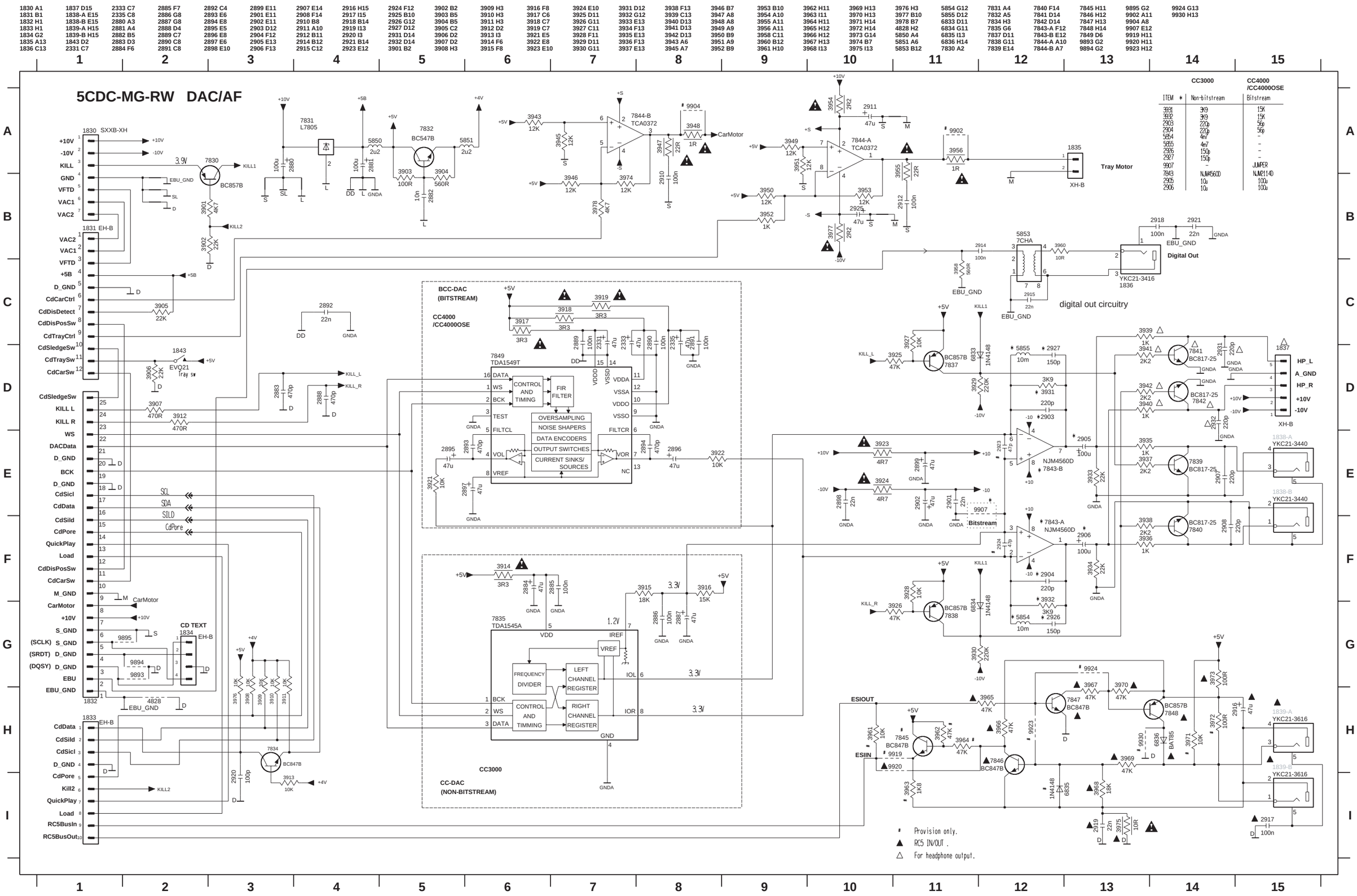

COMPONENT & CHIP LAYOUTS

1830	G1	2880	F1	2916	A5	3919	D3	3973	B4	7832	E2	9861	D3	9875	F4	9890	D4	9907	C3	9925	B2								
1831	G3	2881	E1	2925	F2	3921	D2	3975	C4	7843	C2	9862	F2	9876	E4	9891	D5	9909	C2	9928	A2								
1832	E5	2884	D2	3901	G1	3922	C2	3976	F3	7844	E2	9863	F2	9877	E4	9892	D5	9910	B2	9929	A4								
1833	G4	2887	D1	3906	F2	3923	C2	3977	F2	9850	G1	9864	F2	9878	E4	9893	D5	9911	B2	9930	B4								
1834	G5	2895	D2	3907	C4	3924	C2	5850	F1	9851	G1	9865	F3	9879	E1	9894	D5	9912	B2	9932	D4								
1835	G5	2896	C2	3908	C4	3929	B3	5851	F2	9852	G1	9866	F3	9881	D2	9895	D5	9914	B2										
1836	A1	2897	C2	3909	F3	3947	E3	5853	A1	9853	E3	9867	C2	9882	D2	9896	D1	9915	B2										
1837	B1	2899	C1	3910	G4	3948	E3	5854	C2	9854	G1	9868	F3	9883	D4	9899	A2	9917	D3										
1838	A3	2902	C1	3911	F4	3954	F2	5855	C3	9855	E2	9869	F3	9884	F1	9900	D4	9919	C4										
1839	A4	2905	B3	3912	C4	3955	F3	6833	B2	9856	E1	9870	F4	9885	E4	9901	D4	9920	C4										
1843	F1	2906	B2	3913	F4	3956	F3	6834	A2	9857	F1	9871	F4	9886	E4	9902	F3	9921	C4										
2331	D3	2911	F2	3914	D1	3958	A1	6835	C4	9858	F1	9872	F4	9887	D4	9903	E4	9922	C4										
2333	C3	2914	A1	3917	D3	3960	A1	6836	A4	9859	F2	9873	F4	9888	D4	9904	E3	9923	B4										
2335	C3	2915	A1	3918	D3	3967	B4	7831	F1	9860	F2	9874	F4	9889	D4	9905	B1	9924	B4										

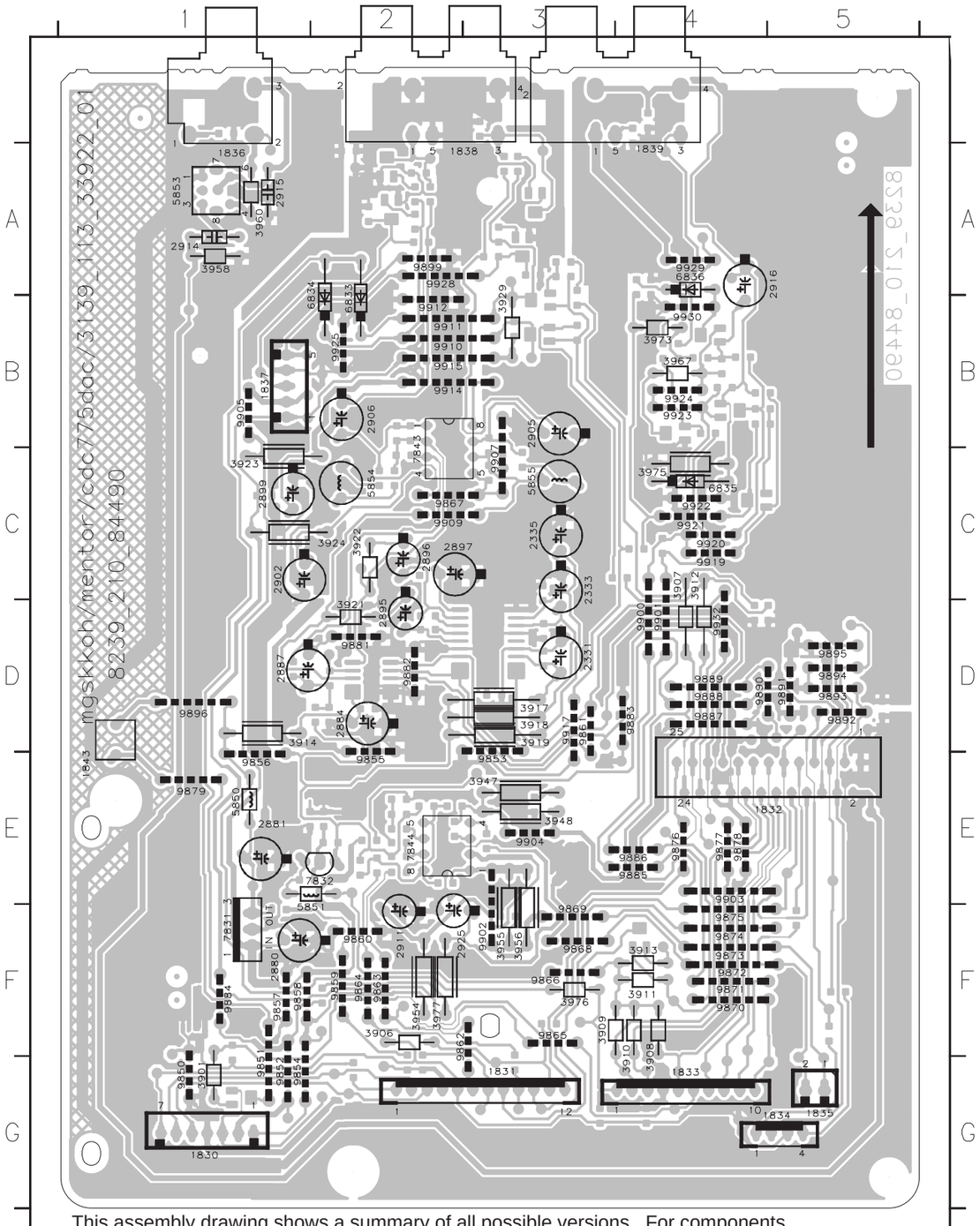

This assembly drawing shows a summary of all possible versions. For components used in a specific version see schematic diagram and respective parts list.

3392p2

2882	E4	2898	C5	2920	G3	3905	G4	3934	B4	3946	E4	3966	B2	4803	G2	4814	E4	7835	D4	7849	D4								
2883	D2	2901	C5	2921	A4	3915	D4	3935	A3	3949	E4	3968	B2	4804	F3	4815	E3	7837	B3										
2885	D4	2903	B3	2923	C3	3916	D4	3936	A4	3950	E4	3969	B2	4805	F1	4822	C4	7838	B3										
2886	D4	2904	B4	2924	C4	3925	A3	3937	A3	3951	E4	3970	B2	4806	F1	4824	D5	7839	A3										
2888	D1	2907	A3	2926	C4	3926	C2	3938	A4	3952	E4	3971	A2	4807	F4	4826	B3	7840	A4										
2889	D3	2908	A4	2927	C3	3927	A3	3939	A3	3953	E4	3972	B2	4808	C2	4827	B2	7841	A3										
2890	D3	2910	E3	2931	A3	3928	B3	3940	A4	3961	C2	3974	E4	4809	C4	4828	D1	7842	A4										
2891	D3	2912	E3	2932	A4	3930	B3	3941	A3	3962	C2	3978	E4	4810	F5	4832	A2	7845	C2										
2892	D3	2917	A2	3902	F5	3931	B3	3942	A4	3963	B2	4800	G4	4811	E4	4835	F1	7846	B2										
2893	D4	2918	A5	3903	E4	3932	B4	3943	E4	3964	B2	4801	G4	4812	E4	7830	G5	7847	B2										
2894	D4	2919	A2	3904	E5	3933	B3	3945	E4	3965	B2	4802	G3	4813	E5	7834	F2	7848	B2										

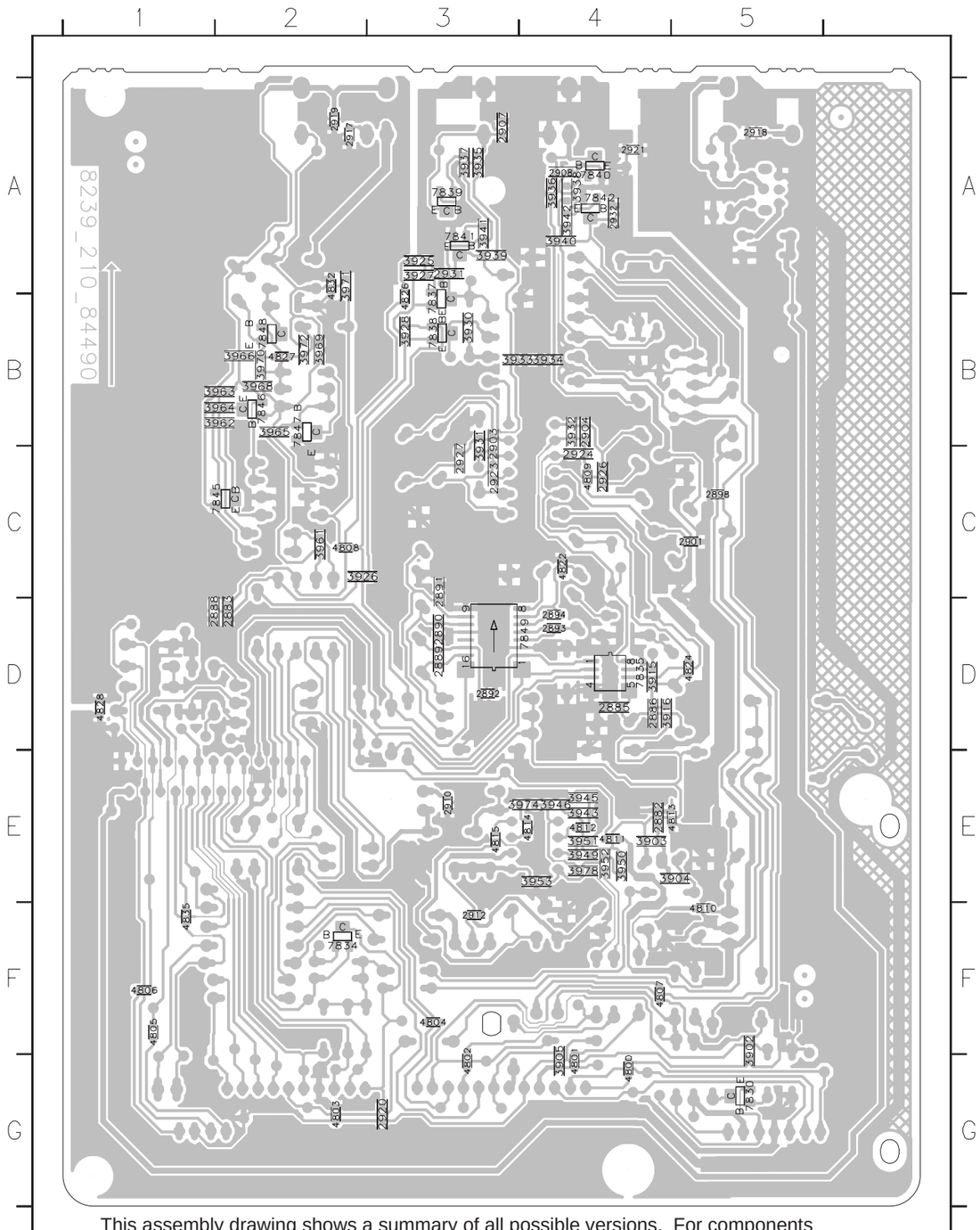

This assembly drawing shows a summary of all possible versions. For components used in a specific version see schematic diagram and respective parts list.

3392p2

9-4

ELECTRICAL PARTS LIST - DAC/AF BOARD

MISCELLANEOUS

1832	4822 265 11556	Flex Socket 25Pin Hort.
1836	4822 267 31729	Digital-Out Socket
1838	4822 267 20452	Analog-Out Socket for CC3000, CC4000
1838	4822 267 41064	Analog-Out Socket for CC4000F
1839	4822 267 31817	Remot Socket
1843	4822 276 13106	Tact Switch

CAPACITORS

2331	4822 124 40433	47µF 20% 25V for CC4000, CC4000F
2333	4822 124 40433	47µF 20% 25V for CC4000, CC4000F
2335	4822 124 40433	47µF 20% 25V for CC4000, CC4000F
2880	4822 124 40207	100µF 20% 25V
2881	4822 124 40207	100µF 20% 25V
2882	4822 122 33177	10nF 20% X7R 50V
2883	5322 122 32268	470pF 10% 50V
2884	4822 124 40433	47µF 20% 25V for CC3000
2885	4822 126 14585	100nF 10% X7R 0805 50V for CC3000
2886	4822 126 14585	100nF 10% X7R 0805 50V for CC3000
2887	4822 124 40433	47µF 20% 25V for CC3000
2888	5322 122 32268	470pF 10% 50V
2889	4822 126 14585	100nF 10% X7R 0805 50V for CC4000, CC4000F
2890	4822 126 14585	100nF 10% X7R 0805 50V for CC4000, CC4000F
2891	4822 126 14585	100nF 10% X7R 0805 50V for CC4000, CC4000F
2892	5322 122 32654	22nF 10%X7R 63V
2893	5322 122 32268	470pF 10% 50V for CC4000, CC4000F
2894	5322 122 32268	470pF 10% 50V for CC4000, CC4000F
2895	4822 124 40433	47µF 20% 25V for CC4000
2895	2020 012 93203	10µF 20% 50V for CC4000F
2896	4822 124 40433	47µF 20% 25V for CC4000
2896	2020 012 93203	10µF 20% 50V for CC4000F
2897	4822 124 40433	47µF 20% 25V for CC4000
2897	2020 012 93432	47µF 20% 50V for CC4000F
2898	5322 122 32654	22nF 10%X7R 63V
2899	4822 124 40433	47µF 20% 25V for CC3000, CC4000
2899	4822 124 12023	47µF 20% 25V for CC4000F
2901	5322 122 32654	22nF 10%X7R 63V
2902	4822 124 40433	47µF 20% 25V for CC3000, CC4000
2902	4822 124 12023	47µF 20% 25V for CC4000F
2903	4822 122 33575	220pF 5% NP0 63V CASE 0805 for CC3000
2903	4822 126 13693	56pF 1% NP0 63V for CC4000, CC4000F
2904	4822 122 33575	220pF 5% NP0 63V CASE 0805 for CC3000
2904	4822 126 13693	56pF 1% NP0 63V for CC4000, CC4000F
2905	4822 124 80865	10µF 20% 25V for CC3000
2905	4822 124 40433	47µF 20% 25V for CC4000
2905	4822 124 80954	47µF 6.3V for CC4000F
2906	4822 124 80865	10µF 20% 25V for CC3000
2906	4822 124 40433	47µF 20% 25V for CC4000
2906	4822 124 80954	47µF 6.3V for CC4000F
2907	4822 122 33575	220pF 5% NP0 63V CASE 0805
2908	4822 122 33575	220pF 5% NP0 63V CASE 0805
2910	4822 126 14585	100nF 10% X7R 0805 50V
2911	4822 124 80231	47µF 20% 16V
2912	4822 126 14585	100nF 10% X7R 0805 50V
2914	4822 126 12882	100nF+80-20% 50V
2915	4822 126 11585	22nF+80-20% Y5V 25V
2916	4822 124 80231	47µF 20% 16V
2917	4822 126 14585	100nF 10% X7R 0805 50V
2918	4822 126 14585	100nF 10% X7R 0805 50V
2919	5322 122 32654	22nF10%X7R 63V
2920	5322 122 32531	100pF 5%NP0 50V
2921	5322 122 32654	22nF 10%X7R 63V
2925	4822 124 80231	47µF 20% 16V
2926	5322 122 33538	150pF 2%NP0 63V for CC3000
2926	5322 122 32531	100pF 5%NP0 50V for CC4000, CC4000F
2927	5322 122 33538	150pF 2%NP0 63V for CC3000
2927	5322 122 32531	100pF 5%NP0 50V for CC4000, CC4000F
2931	4822 122 33575	220pF 5% NP0 63V CASE 0805
2932	4822 122 33575	220pF 5% NP0 63V CASE 0805

RESISTORS

3901	4822 116 52283		4k7 5% 0.5W
3902	4822 051 20223		22k 5% 0.1W
3903	4822 051 20101		100R 5% 0.1W
3904	4822 051 20561		560R 5% 0.1W
3905	4822 051 20223		22k 5% 0.1W
3906	4822 116 52257		22k 5% 0.5W
3907	4822 116 83883		470R 5% 0.5W
3908	4822 050 21003		10k 1% 0.6W
3909	4822 050 21003		10k 1% 0.6W
3910	4822 050 21003		10k 1% 0.6W
3911	4822 050 21003		10k 1% 0.6W
3912	4822 116 83883		470R 5% 0.5W
3913	4822 050 21003		10k 1% 0.6W
3914	4822 052 10338	⚠	3R3 5% 0.33W for CC3000
3915	4822 117 10965		18k 1% 0.1W for CC3000
3916	4822 116 83933		15k 1% 0.1W for CC3000
3917	4822 052 10338	⚠	3R3 5% 0.33W for CC4000, CC4000F
3918	4822 052 10338	⚠	3R3 5% 0.33W for CC4000, CC4000F
3919	4822 052 10338	⚠	3R3 5% 0.33W for CC4000, CC4000F
3921	4822 116 83961		6k8 5% for CC4000, CC4000F
3922	4822 116 83961		6k8 5% for CC4000, CC4000F
3923	4822 052 10478	⚠	4R7 5% 0.33W
3924	4822 052 10478	⚠	4R7 5% 0.33W
3925	4822 117 10834		47k 1% 0.1W
3926	4822 117 10834		47k 1% 0.1W
3927	4822 117 10833		10k 1% 0.1W
3928	4822 117 10833		10k 1% 0.1W
3929	4822 116 83874		220k 5% 0.5W
3930	4822 117 13579		220k 1% 0.1W RC12H 0805
3931	4822 051 20392		3k9 5% 0.1W for CC3000
3931	4822 117 10833		10k 1% 0.1W for CC4000, CC4000F
3932	4822 051 20392		3k9 5% 0.1W for CC3000
3932	4822 117 10833		10k 1% 0.1W for CC4000, CC4000F
3933	4822 051 20223		22k 5% 0.1W
3934	4822 051 20223		22k 5% 0.1W
3935	4822 051 10102		1k 2% 0.25W
3936	4822 051 10102		1k 2% 0.25W
3937	4822 117 11449		2k2 1% 0.1W
3938	4822 117 11449		2k2 1% 0.1W
3939	4822 051 10102		1k 2% 0.25W for CC4000, CC4000F
3940	4822 051 10102		1k 2% 0.25W for CC4000, CC4000F
3941	4822 117 11449		2k2 1% 0.1W for CC4000, CC4000F
3942	4822 117 11449		2k2 1% 0.1W for CC4000, CC4000F
3943	4822 117 11383		12k 1% 0.1W
3945	4822 117 11383		12k 1% 0.1W
3946	4822 117 11383		2k 1% 0.1W
3947	4822 052 10229	⚠	22R 5% 0.33W
3948	4822 052 10108	⚠	1R 5% 0.33W
3949	4822 117 11383		12k 1% 0.1W
3950	4822 117 11383		12k 1% 0.1W
3951	4822 117 11383		12k 1% 0.1W
3952	4822 051 10102		1k 2% 0.25W
3953	4822 117 11383		2k 1% 0.1W
3954	4822 052 10228	⚠	2R2 5% 0.33W
3955	4822 052 10229	⚠	22R 5% 0.33W
3956	4822 052 10108	⚠	1R 5% 0.33W
3958	4822 116 52226		560R 5% 0.5W
3960	4822 116 52176		10R 5% 0.5W
3965	4822 117 10834		47k 1% 0.1W
3966	4822 117 10834		47k 1% 0.1W
3967	4822 116 83884		47k 5% 0.5W
3968	4822 117 10965		18k 1% 0.1W
3969	4822 117 10834		47k 1% 0.1W
3970	4822 117 10834		47k 1% 0.1W
3973	4822 116 52175		100R 5% 0.5W
3974	4822 117 11383		12k 1% 0.1W
3975	4822 052 10109	⚠	10R 5% 0.33W
3976	4822 050 21003		10k 1% 0.6W
3977	4822 052 10228	⚠	2R2 5% 0.33W
3978	4822 051 20472		4k7 5% 0.1W
4800	4822 051 20008		0R00 JUMP. (0805)
4801	4822 051 20008		0R00 JUMP. (0805)
4802	4822 051 20008		0R00 JUMP. (0805)
4803	4822 051 20008		0R00 JUMP. (0805)
4804	4822 051 20008		0R00 JUMP. (0805)
4805	4822 051 20008		0R00 JUMP. (0805)
4806	4822 051 20008		0R00 JUMP. (0805)
4807	4822 051 20008		0R00 JUMP. (0805)
4808	4822 051 20008		0R00 JUMP. (0805)
4809	4822 051 20008		0R00 JUMP. (0805)
4810	4822 051 20008		0R00 JUMP. (0805)
4811	4822 051 20008		0R00 JUMP. (0805)
4812	4822 051 20008		0R00 JUMP. (0805)
4813	4822 051 20008		0R00 JUMP. (0805)
4814	4822 051 20008		0R00 JUMP. (0805)
4815	4822 051 20008		0R00 JUMP. (0805)
4822	4822 051 20008		0R00 JUMP. (0805)
4824	4822 051 20008		0R00 JUMP. (0805)
4826	4822 051 20008		0R00 JUMP. (0805)
4827	4822 051 20008		0R00 JUMP. (0805)
4832	4822 051 20008		0R00 JUMP. (0805)
4835	4822 051 20008		0R00 JUMP. (0805)

COILS & FILTERS

5850	4822 157 11477	Coil 2,2µH 5%
5851	4822 157 11477	Coil 2,2µH 5%
5853	4822 157 70601	Coil 100µH 10%
5854	4822 157 71086	Coil 4700µH 5%
5855	4822 157 71086	Coil 4700µH 5%

DIODES

6833	4822 130 30621	1N4148
6834	4822 130 30621	1N4148
6836	4822 130 31983	BAT85

TRANSISTOR & INTEGRATED CIRCUITS

7830	4822 130 60373	BC856B
7831	4822 209 80817	L7805CV
7832	4822 130 40959	BC547B
7834	5322 130 60159	BC846B
7835	4822 209 33164	TDA1545AT/N2 for CC3000
7837	4822 130 60373	BC856B
7838	4822 130 60373	BC856B
7839	4822 130 42804	BC817-25
7840	4822 130 42804	BC817-25
7841	4822 130 42804	BC817-25 for CC4000, CC4000F
7842	4822 130 42804	BC817-25 for CC4000, CC4000F
7843	4822 209 83274	NJM4560D for CC3000
7843	4822 209 31153	NJM2114D for CC4000, CC4000F
7844	4822 209 62059	TCA0372DP1
7846	5322 130 60159	BC846B
7847	5322 130 60159	BC846B
7848	4822 130 60373	BC856B
7849	4822 209 33252	TDA1549T/N1 for CC4000, CC4000F

Note: Only the parts mentioned in this list are normal service spare parts.

10-1

EXPLODED VIEW - FRONT PART

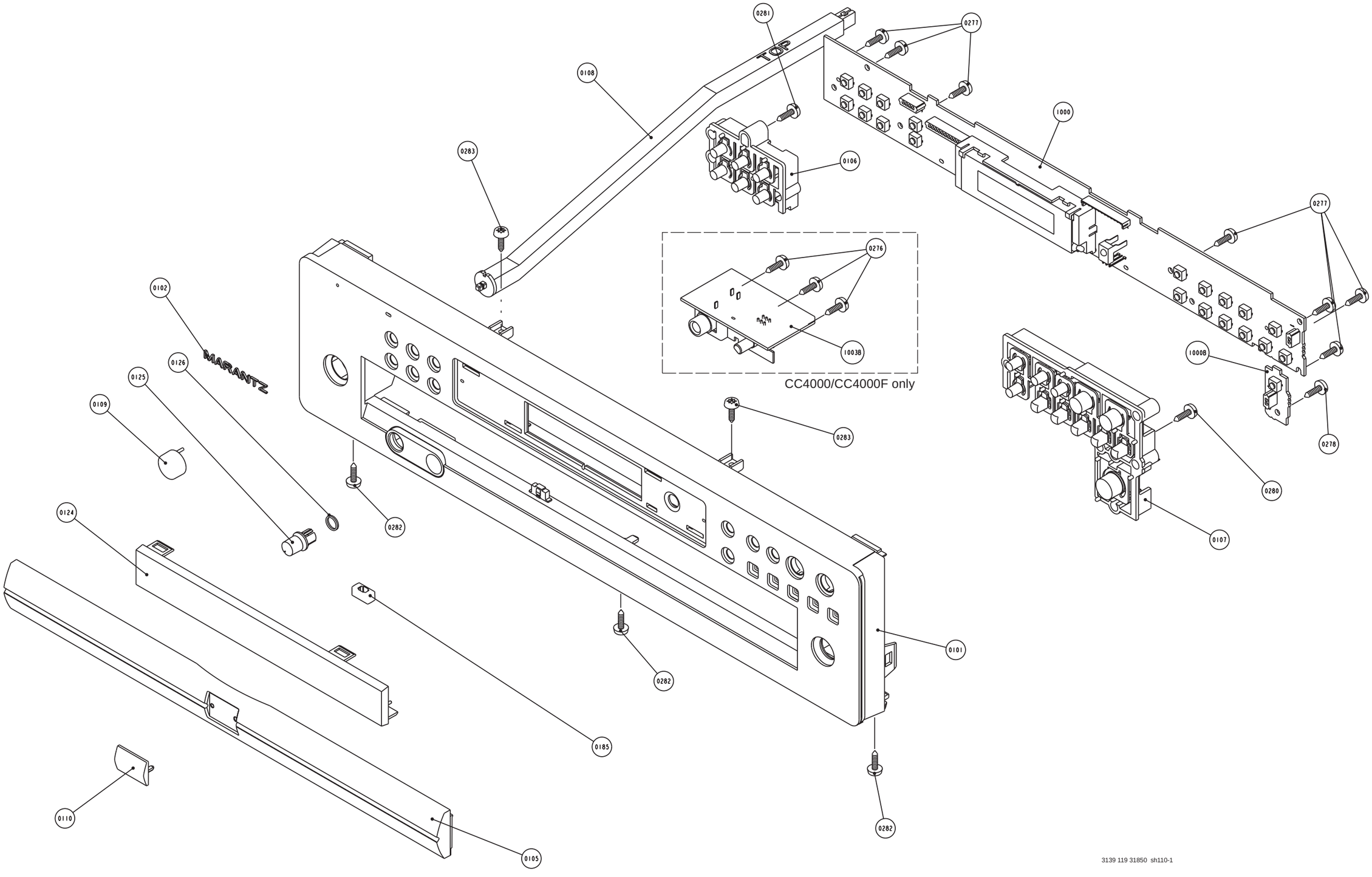

3139 119 31850 sh110-1

10-2

EXPLODED VIEW - REAR PART

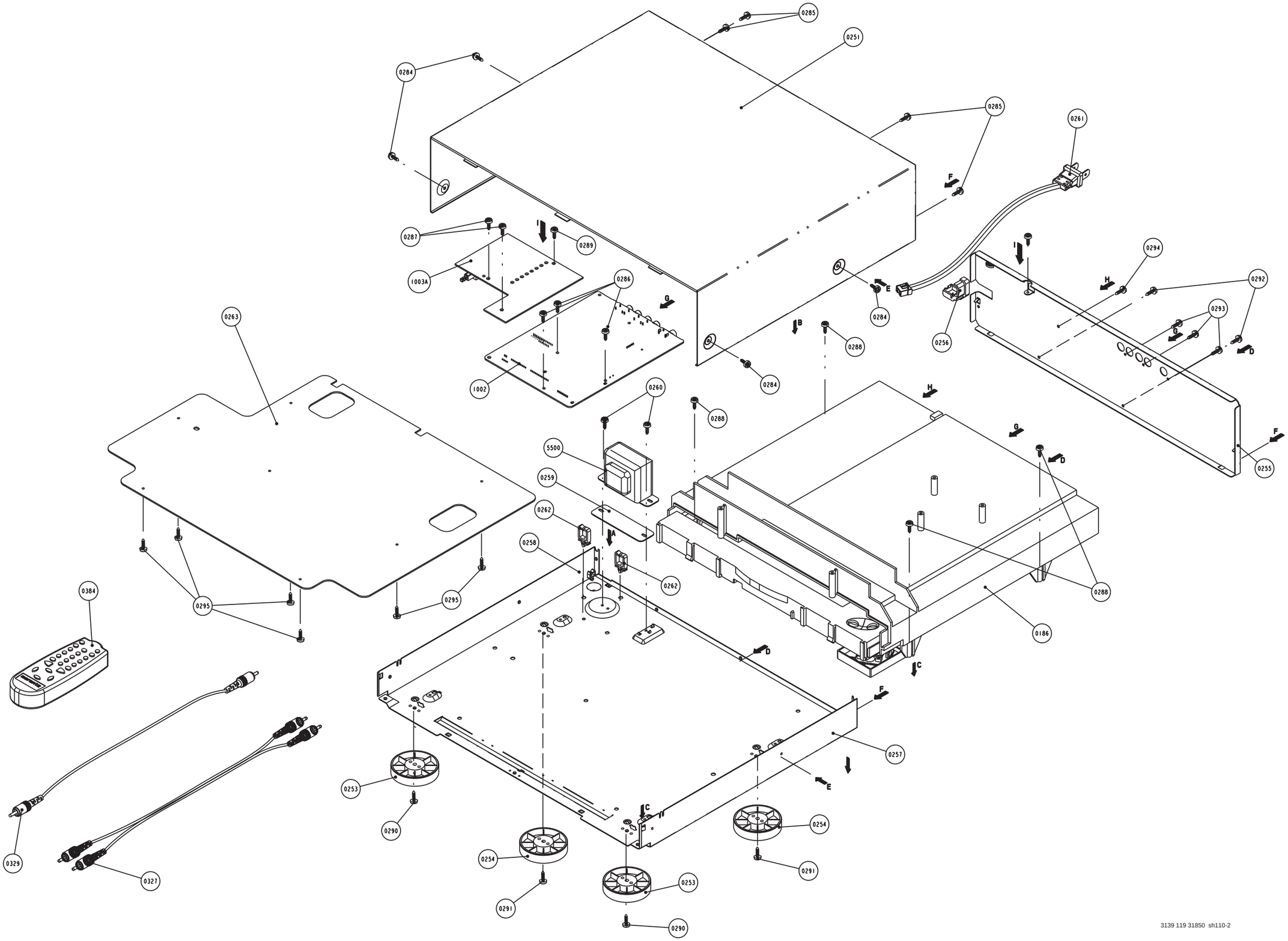

3139 119 31850 sh110-2

10-3

EXPLODED VIEW - CDC5 LOADER

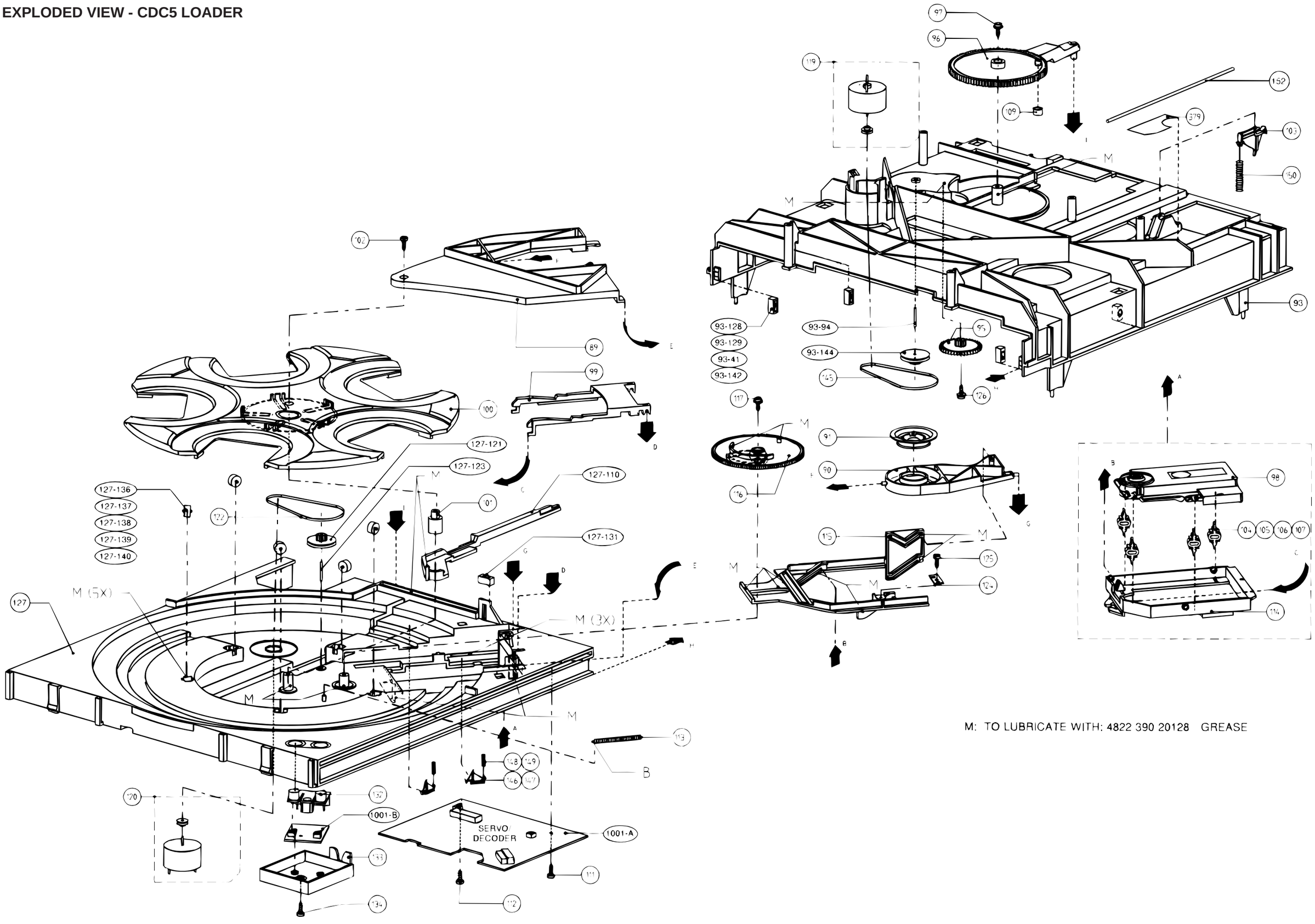

M: TO LUBRICATE WITH: 4822 390 20128 GREASE

EXPLODED VIEW - CDC5 LOADER

89	4822 466 93131	Pressure Plate
90	4822 256 91912	Pressure Ring Holder
91	4822 401 11708	Clamper Assembly
93	4822 426 90109	Frame Assembly
93-128	4822 466 93132	Guide
93-129	4822 466 93132	Guide
93-141	4822 466 93132	Guide
93-142	4822 466 93132	Guide
93-144	4822 528 50334	Pulley
95	4822 522 33255	Gearwheel
96	4822 402 11241	Crank CDC5
98	4822 691 10615	CD Mechanism VAM1201
99	4822 403 70598	CDM Lock
100	4822 466 93129	Rotary Disc Assembly
101	4822 520 20758	Bearing
103	4822 401 11447	Tray Tumbler
104	4822 404 10986	Suspension, Rubber
105	4822 404 10986	Suspension, Rubber
106	4822 404 10986	Suspension, Rubber
107	4822 404 10986	Suspension, Rubber
109	4822 532 51756	Damping Grommet
113	4822 492 52313	Tension Spring
114	4822 256 91915	Support
115	4822 466 93134	Slide Strip
116	4822 522 33256	Cam Wheel
119	4822 361 21562	Motor Assembly
120	4822 361 21562	Motor Assembly
122	4822 358 10115	Belt
124	4822 402 61489	Bracket
127	4822 444 50685	Tray Assembly
127-110	4822 401 11444	Switch Bracket
127-121	4822 528 50334	Pulley
127-131	4822 466 93132	Guide
127-136	4822 528 70646	Pinch Roller Assembly
127-137	4822 528 70646	Pinch Roller Assembly
127-138	4822 528 70646	Pinch Roller Assembly
127-139	4822 528 70646	Pinch Roller Assembly
127-140	4822 528 70646	Pinch Roller Assembly
132	4822 403 70599	Button Load/Quick Play
145	4822 358 10115	Belt
146	4822 402 50291	Lift Tumbler
147	4822 402 50291	Lift Tumbler
148	4822 492 52123	Compression Spring
149	4822 492 52123	Compression Spring
150	4822 492 52123	Compression Spring
1054	4822 323 10461	Flex Cable 25 Pin 19cm
M	4822 390 10136	Grease Polylub. GIY801

Note: Only the parts mentioned in this list are normal service spare parts.

EXPLODED VIEW - FRONT & REAR PART

101	3139 117 87670	CABINET FRONT for CC3000
101	3139 117 87660	CABINET FRONT for CC4000
101	3139 117 87650	CABINET FRONT for CC4000F
102	4822 454 11825	PLATE, INDICATION, PLASTIC
105	3139 114 66830	COVER TRAY
106	3139 114 66840	BUTTON SET LEFT
107	3139 117 87700	BUTTON SET PRINT RIGHT
108	3139 114 66860	LEVER POWER
109	4822 410 12499	BUTTON POWER
110	3139 117 87710	BADGE
124	3139 114 66870	WINDOW DISPLAY
125	3139 114 66880	KNOB HEADPHONE for CC4000, CC4000F
185	4822 466 93132	GUIDE, PLASTIC
253	4822 462 42129	FOOT GOLD FRONT
254	4822 462 42129	FOOT GOLD FRONT
256	4822 532 60948	BUSH, PLASTIC
261	4822 321 11464	MAINS CORD SET for /U
261	4822 321 11139	POWER CORD for /N, /K
261	4822 321 11349	MAINS CORD 125V 12A for /F
327	4822 321 22832	SBC1072 2XRCA-2XRCA
329	4822 320 11642	ASSY CINCH/CINCH 1.7M YE B
384	3139 228 82580	RC07113/02
387	3139 116 18840	DOC DIRECTIONS FOR USE for /U
387	3139 116 18870	DOC DIRECTIONS FOR USE for CC3000/N, CC3000/K
387	3139 116 18850	DOC DIRECTIONS FOR USE for CC4000/K, CC4000F/K
387	3139 116 18860	DOC DIRECTIONS FOR USE for /F
389	4822 263 21092	ADAPTER PLUG for /K
5500	4822 146 31374	⚠ TRANSFORMER for CC3000/U
5500	4822 146 31373	⚠ TRANSFORMER for /N
5500	4822 146 31196	⚠ TRANSFORMER for /K
5500	4822 146 31405	⚠ TRANSFORMER for CC4000/U, CC4000F/U
5500	4822 146 10512	⚠ TRANSFORMER for /F

Note: Only the parts mentioned in this list are normal service spare parts.